UNCLASSIFIED

AD NUMBER
AD849002
LIMITATION CHANGES
TO: **Approved for public release; distribution is unlimited.**
FROM: **Distribution authorized to U.S. Gov't. agencies and their contractors; Administrative/Operational Use; 25 FEB 1969. Other requests shall be referred to Assistant Chief of Staff for Force Development (Army), Attn: FOR-OT-UT, Washington, DC 20310.**
AUTHORITY
AGO D/A ltr dtd 29 Apr 1980

THIS PAGE IS UNCLASSIFIED

FOR OFFICIAL USE ONLY

DEPARTMENT OF THE ARMY
OFFICE OF THE ADJUTANT GENERAL
WASHINGTON, D.C. 20310

IN REPLY REFER TO

AGAM-P (M) (14 Feb 69) FOR OT UT 684137 25 February 1969

SUBJECT: Operational Report - Lessons Learned, Headquarters, 577th Engineer Battalion (Construction), Period Ending 31 Oct 1968

AD849002

SEE DISTRIBUTION

1. Subject report is forwarded for review and evaluation in accordance with paragraph 5b, AR 525-15. Evaluations and corrective actions should be reported to ACSFOR OT UT, Operational Reports Branch, within 90 days of receipt of covering letter.

2. Information contained in this report is provided to insure appropriate benefits in the future from lessons learned during current operations and may be adapted for use in developing training material.

BY ORDER OF THE SECRETARY OF THE ARMY:

Kenneth G. Wickham

KENNETH G. WICKHAM
Major General, USA
The Adjutant General

1 Incl
as

DISTRIBUTION:
Commanding Generals
US Continental Army Command
US Army Combat Developments Command
Commandants
US Army War College
US Army Command and General Staff College
US Army Engineer School

Copies furnished:
Office, Chief of Staff, US Army
Deputy Chiefs of Staff
Chief of Engineers
Chief of Research and Development
Assistant Chiefs of Staff
Defense Documentation Center
Security Officer, Hudson Institute
CG, US Army Materiel Command

DDC
MAR 1 1969

Protective marking cancelled when separated from inclosure.

UNCLASSIFIED REPORT

DISTRIBUTION NO FOREIGN WITHOUT APPROVAL OF ASSISTANT CHIEF OF STAFF FOR FORCE DEVELOPMENT (ARMY) ATTN FOR OT UT, WASHINGTON, D.C. 20310

FOR OFFICIAL USE ONLY

DISCLAIMER NOTICE

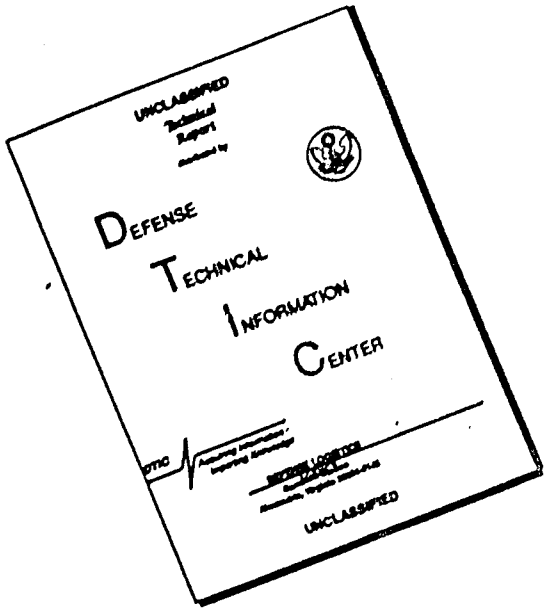

THIS DOCUMENT IS BEST QUALITY AVAILABLE. THE COPY FURNISHED TO DTIC CONTAINED A SIGNIFICANT NUMBER OF PAGES WHICH DO NOT REPRODUCE LEGIBLY.

DEPARTMENT OF THE ARMY
HEADQUARTERS, 577TH ENGINEER BATTALION (CONSTRUCTION)
APO US Forces 96316

EGACHD-3 31 October 1968

SUBJECT: Operational Report of 577th Engineer Battalion (Construction), for Period Ending 31 October 1968, RCS CSFOR-65 (R1)

THRU: Commanding Officer
35th Engineer Group
APO 96312

Commanding General
18th Engineer Brigade
ATTN: AVDC-C
APO 96377

Commanding General
United States Army, Vietnam
ATTN: AVHGC (DST)
APO 96375

Commander in Chief
United States Army, Pacific
ATTN: GPOP-DT
APO 96558

TO: Assistant Chief of Staff for Force Development
Department of the Army (ACSFOR)
Washington, D.C. 20310

Inclosure

FOR OT UT
684137

1. Section 1, Operations: Significant Activities.

a. Attached as inclosure 1 is a chart of the organization of the 577th Engineer Battalion (Construction) with its attached units.

b. This unit engaged in ninety-two days of operations during the period covered. Mandatory and special training were conducted after normal working hours or integrated into the daily work. Training for overseas replacements as prescribed by USARV Reg 350-1 was conducted by a battalion training team every Sunday beginning 13 October. One troop movement was conducted when the 572nd Engineer Company (LE) moved from Tuy Hoa North Field to Phan Rang on 3 October 1968. The 131st Engineer Company (LE) arrived in country on 20 September 1968 and was attached to the battalion.

c. Activities: This period can be essentially divided into two phases. During the month of August and the first three weeks of September the battalion continued its high rate of construction progress moving significantly ahead on the erection of the 840' Ban Thach Bridge and the side hill cut through the Vung Ro Pass to upgrade QL-1. During the last week in September the monsoons engulfed Phu Yen Province, and the units of the battalion were forced to grind out progress whenever the continual rains permitted. On 8 August, C Company completed three (3) additional helipads and revetments for the CH-47's of the 180th Assault Helicopter Company. Six (6) revetments for that unit were thus brought to USARV standards. The first week in August also saw B Company begin the reconstruction of the Signal Site Access Road in Vung Ro. This road, which is the only vehicle access to the mountain top signal site, has grades that in some places exceed 15%. The project entailed widening and leveling the road with demolitions and dozers and surface treating with cutback asphalt and sand so that logistical resupply could be continued during the monsoons. On 1 August, the first platoon of the 643rd Engineer Company (PL) was attached to the Battalion and began work on the 6.6 mile relocation of the vital six (6) and eight (8) inch POL lines which move the diesel, mogas and JP-4 from the tankers at Vung Ro Bay to Tuy Hoa Air Force Base and the Phu Hiep Free World Forces Cantonment. At the close of this reporting period the lines, including five (5) water crossings, were nearing completion. During the month of August, only two enemy encounters took place. On 17 August, the cantonment of B Company (with attached personnel from A Company) at Vung Ro Bay was subjected to mortar attack, resulting in one B Company soldier WIA. On 23 August, the 572nd Engineer Company (LE) at Tuy Hoa North Field received seven (7) rounds of B-40 rocket fire which narrowly missed the rock crushers operating at that location. The end of August saw the completion of the first phase of the operational support mission at Vung Ro Bay. This was a two part operation requiring the clearing of a 50 meter wide path around the port area during the first phase and the clearing of an additional 50 meters and construction of two (2) first aid bunkers, six (6) fighting bunkers, a COC bunker and an observation tower during the second phase. By the end of September, a total of 270,000 square meters of dense vegetation on the rugged mountainside surrounding this port facility had been cut down by

B Company, completing the clearing. The entire project was completed by 31 October 1968. In September, the battalion initiated construction of three cantonment facilities. In a two week period, D Company completed reconstruction of a 20'x80' building for the MACV team at Dong Xuan which had been destroyed by enemy action. D Company also began the self help cantonment for A Battery, 4th Bn, 60th Artillery in Phu Hiep. This project, which consists of 5,000 ft^2 of EM billets, 1,000 ft^2 of BOQ, 1,000 ft^2 orderly room, latrines, showers and a 1,000 ft^2 maintenance facility is nearing completion at the quarters end. B Company commenced work on the 261st Signal Site Cantonment in Vung Ro, attempting to beat the monsoon rains and winds which caused extensive damage to that area last year. Construction, which included 7,000 ft^2 of EM billets, 400 ft^2 of BQ, latrines, showers and a 1,300 ft^2 mess hall is also nearing completion. On 21 September, the 131st Engineer Company (LE) arrived at Tuy Hoa Air Force Base, RVN. The landing culminated the final stage of their movement which began when this unit, of the Vermont National Guard, was called to active duty in May 1968. Upon arrival they began a week of intensive training and orientation for their duty in Vietnam, and specifically Phu Yen Province. With their arrival came the almost simultaneous departure of the 572nd Engineer Company (LE) which left for Bao Lac on 19 October 1968, to support the 116th Engineer Battalion (Combat). The 131st assumed control from the 572nd of the operation of the crusher complex (two 75 ton/hr primary and secondary units) at Tuy Hoa North Field and Chap Chai Quarry. With the end of this reporting period, the 131st prepares to move to Ban Me Thuot to support the 70th Engineer Battalion (Combat). September saw an increase in enemy activity with seven (7) separate incidents. Two (2) 290 tractors and one (1) 5 ton dump truck were damaged by enemy land mines and one 290 tractor was destroyed by a B-40 rocket. The 572nd cantonment at North Field was attacked with small arms, mortars and rockets on 22 September, and on 23 September a member of C Company tripped an antipersonnel booby trap causing minor injuries. A three (3) barrel 48" culvert on a completed section of highway QL-1 was destroyed on 18 September closing the road for four (4) hours. During the final week of September 6.6 inches of rain fell in the Tuy Hoa Valley. On 1 October D Company began construction of a 20'x48' quonset on 18" high concrete walls for the 91st Evac Hospital. This air conditioned building will be utilized as a hospital laboratory. On 3 October, C Company, in support of 6th Battalion, 32nd Artillary and 1st Battalion, 28th RCT, ROKA, hauled and placed 100 cubic yards of blast rock and three (3) 20' sections of 30" culvert to repair a ford on highway LTL-7B. This ford, which had become impassible, denied all traffic between Tuy Hoa and Cung Son, the site of a refugee camp, CIDG camp and Artillery Battery. One (1) 5 ton dump truck was lost to an enemy land mine on this operation resulting in one (1) WIA. On 11 October A Company moved its quarry-crusher section from Vung Ro to Tuy Hoa North Field to assume responsibility for the crushers at that location and the Chap Chai Quarry. The Vung Ro quarry-crusher complex is now being operated by B Company. In Vung Ro, B Company, taking advantage of low tides, completed extensive repairs on an LST ramp in two days. The task consisted of chipping out the old broken concrete slab and placing a new pad with 25 cubic yards of reinforced concrete. C Company completed seven (7)

revetments for the OV-1 Mohawk unit on 26 October. During the entire quarter, C Company continued work on the PASCO buildings for Tuy Hoa Subarea Command (THSAC); Phu Hiep Army Airfield Chapel, Tuy Hoa Ammunition Storage Facilities, THSAC Maintenance Sheds and the Ban Thach Bridge. In late August, C Company, after constructing a permanent precast facility, began precasting the deck for this bridge. Casting six (6) interior and six (6) exterior slabs every two (2) days, the 24 hour a day crews completed the 336 slabs needed to complete the bridge by the end of October. The bridge, which is two spans shy of completion, is expected to open by 1 December. B and D Companies continued their upgrading of highway QL-1, hauling 90,000 cubic yards of select fill and 35,000 cubic yards of 3"(-) rock. 17 drainage structures were completed, and 35,045 cubic yards of earth have been removed from the Vung Ro Mountain Pass using 10,080 pounds of demolitions. The 553rd Engineer Company (FB) continued maintenance of the Ban Thach River Float Bridge and the four (4) M4T6 fixed spans and four (4) Bailey Bridges in the battalion AOR. During the period 18-24 October the 553rd worked around the clock for 86 hours to keep the float bridge open as 14" of monsoon rains caused the Ban Thach River to rise eight (8) feet in 48 hours. In mid-October, the company, working at night, emplaced the 14 Class 50 trestles needed to span the island in the center of the Ban Thach River and compensate for the inevitable rise in water which accompanies the monsoons.

d. Summary: The arrival of the 131st Engineer Company (LE), their subsequent training, assignment of missions, the progress made on the Ban Thach Bridge, and the mountain cut in Vung Ro Pass were the highlights of this reporting period. The five (5) rock crushers operated by this battalion, crushing rock from two quarries, produced 37,283 cubic yards of rock. This rock supplied the needs for road base course, concrete and asphalt rock used in battalion operations. 3.75 kilometers of QL-1 was paved and completed to MACV standards, and an addition eight (8) kilometers was brought to base course elevation in preparation for paving.

2. Section 2, Lessons Learned: Commander's Observations, Evaluations, and Recommendations.

a. Personnel: Discrepancies in personnel records of overseas replacements.

(1) OBSERVATION: Records accompanying overseas replacements are not being properly maintained. Supporting documents are missing and DA Form 20 is not being properly posted. Promotion orders are missing from military personnel records jacket, and required promotion standing lists are not being included. Personnel are not being interviewed and a statement of declination or intent to reenlist as required by AR 612-35, is not being signed prior to overseas movement. Personnel who have been evaluated in PMOS but have not received results are required by AR 600-200 to have test control officer's number entered on DA Form 20. This is not being done.

(2) EVALUATION: As a result of above discrepancies personnel cannot be placed on current promotion standing list without verification from losing unit. Senior enlisted grade personnel cannot be properly requisitioned without intent or declination of reenlistment, and DEROS cannot be correctly established. Undue paper work is now required to verify PMOS test scores because of unknown data.

(3) RECOMMENDATION: Personnel records should be throughly screened in strict compliance with para 17, AR 612-35 by qualified personnel at a port POR board prior to release of records for overseas shipment. Units should be required to furnish supporting documents for entries made on DA Form 20, and test control officers should furnish a monthly listing of personnel tested to the port POR board for verification of DA Form 20.

b. Operations:

(1) Expedient method for producing drop inlet culverts and checkdams:

(a) OBSERVATION: Highway QL-1 through the Vung Ro Pass has grades and rainfall runoff which require installation of over 100 checkdams and ten drop inlet culverts.

(b) EVALUATION: In the precast operation which was initiated, a steel banding machine was used to hold together the plywood forms. The banding permitted quick assembly and disassembly and considerable re-use of the forms. See sketch.

(c) RECOMMENDATION: In the precasting of simple forms, a banding machine be used to hold together the forms.

(2) Louver Blocks:

(a) OBSERVATION: The strong winds encountered in the construction of Signal Mountain Cantonment drove the rain horizontaly and caused rain to enter the buildings constructed with standard louver blocks.

(b) EVALUATION: A smaller block was prefabricated so that the angle of the louver board could be decreased, and the boards could be over lapped to appreciably lessen the amount of wind and rain that could enter the building.

(c) RECOMMENDATION: In areas where there is more than average wind with the possibility of updrafts, a smaller louver block with an additional overlapping of louver board should be used.

(3) Failure of Sand Cement:

(a) OBSERVATION: After days of heavy rain, the sand cement roads at the Tuy Hoa ASP began to fail by cracking in several places.

(b) EVALUATION: Investigation revealed that the decomposed granite sub-base had, by capillary action, soaked up enough water from the surrounding sand to become extremely plastic. Under load, the sand cement road, forced the decomposed granite out to the shoulder, thus leaving a void and causing beam action of the rigid sand cement pavement and subsequent failure.

(c) RECOMMENDATION: That fill material with a high plasticity index not be used as a subbase material unless it is placed in such high fills that it will not be able to draw water up far enough to cause failure.

(4) Preservation of Sand Berms:

(a) OBSERVATION: The twelve (12) foot high sand berms at the Tuy Hoa ASP were subjected to constant wind and water erosion until seeded and subsequently stabilized with an application of coherex. The grass seed has germinated and grown up (rather sparsely) through the coherex coating.

(b) EVALUATION: Berms stabilized with soil binder have required considerable maintenance of the asphaltic coating. Utilizing the hydroseeder, a solution of water, grass seed and fertilizer was applied to the berms and subsequently coated with coherex. The coherex has protected the berm from erosion while permitting the grass to grow (although sparsely).

(c) RECOMMENDATION: Sloped areas should be established by application of a seed, fertilizer and water solution from a hydroseeder. The distribution rates for seeding should be doubled or tripled to provide adequate growth for permanent stabilization. The application of seed should be followed by a separate application of the coherex.

(5) Problems in Placing Pre-cast Bridge Deck Slabs:

(a) OBSERVATION: When pre-cast deck slabs were placed on the Ban Thaoh Bridge, it was found that the tolerance was too small to place all slabs within the given square length; and it was extremely difficult to place the last row of slabs so that each span ended up without a long overlay.

(b) EVALUATION: The 1" space allowed between the ends of the precast deck sections was too small and even the most rigid quality control procedures used in the pre-cast yard could not avoid the difficulty in placing the last slabs in each span. This required that special short slabs be pre-cast for the last row in every span.

(c) RECOMMENDATION: In pre-cast bridge deck designs, a total allowance of one percent of the span length be permitted between slab sections (over the total length of the span).

(6) Placing Handrails on the Ban Thach Bridge:

(a) OBSERVATION: It is difficult to prefabricate handrails and subsequently place them at the same elevation over a long pre-cast span (such as the 840' length of the Ban Thach Bridge).

(b) EVALUATION: It was found that the hand rails could be prefabricated and placed with excellent results by cutting the vertical member of the handrail approximately two (2) inches longer than that required and cutting the vertical member to the surveyed height before the handrail is welded in place.

(c) RECOMMENDATION: Cut and prefabricate bridge handrails with vertical posts two inches longer than required, and cut to proper length at the bridge site prior to placement.

(7) Precast Forms Moving Out of Alignment:

(a) OBSERVATION: After casting deck slabs for three weeks in the Ban Thach Bridge Precast Yard, some of the slabs were noticed to be out of square and warped.

(b) EVALUATION: Close inspection of forms revealed that after about ten placements the pre-cast forms, although held rigidly in place by heavy spikes driven into sand cement, tend to work themselves out of alignment and require resetting.

(c) RECOMMENDATION: In precasting operations, inspect the forms after every ten pours.

(8) Movement of Blast Rock from Benches to Quarry Floor:

(a) OBSERVATION: In quarries with two (2) or more narrow benches and a steep slope to the face, removing blast rock from quarry benches to the quarry floor requires a considerable expenditure of time and dozer effort.

(b) EVALUATION: In operating the Chap Chai Quarry, the blast rock must be moved vertically from bench to bench until it reaches the quarry floor. When insufficient dozers are available to keep each bench operational, intermediate benches can be temporarily covered with blast rock, forming a slide on which rock can be pushed from a high bench all the way to the quarry floor.

(c) RECOMMENDATION: In quarry operations where the quarry face is steep, the benches, narrow, and insufficient dozers are available to operate several benches effectively, eliminate intermediate benches temporarily by covering with blast rock and push all the way to the quarry floor.

(9) Prefabrication of Concrete Box Culvert Extensions:

(a) OBSERVATION: Box culvert extensions can be prefabricated and put into place with minimum difficulty on those sections of road too

shallow to accommodate corregated metal pipe.

(b) EVALUATION: On highway QL-1 north of Vung Ro Bay there are many old box culverts that are only 20 feet wide, and must be either widened or replaced by CMP culverts or lengthed. In areas where water stands above rice paddy level, great difficulty has been experienced in placing concrete footers for the culvert headwalls. By precasting concrete culvert floors, with vertical reinforcement extending, and placing these floors as an extension to existing box culverts, pouring in-place vertical walls and placing pre-cast caps on top, these box culverts can be extended without digging up the existing road or disrupting traffic to any extent. See sketch.

(c) RECOMMENDATION: Precast concrete culvert extensions should be used in situations where a large number of culverts need to be extended and developing a precast yard is deemed feasible.

c. Training.

(1) In-country Orientation (Replacement) Training:

(a) OBSERVATION: Extended periods of general training tend to become boring and lose effectiveness. Personnel receiving in-country orientation training seem much more attentive when their training periods are short, concise and oriented to the specific geographic area in which they will be working.

(b) EVALUATION: Comments from personnel receiving training from the Battalion Replacement Training Team indicated that they were much more attentive at those classes which were oriented toward Phu Yen Province, and which indicated the specific problems which they could expect during their tour in this area. Most felt that Vietnam POR training, which they had received earilier, was unspecific and could not hold their interest.

(c) RECOMMENDATION: In-country orientation training conducted on a battalion level should be locally oriented and concise in order to maintain interest.

(2) Escape and Evasion or Survival Information: None

d. Intelligence: None

e. Logistics:

(1) Shortage of Critical Items of TOE Construction Equipment:

(a) OBSERVATION: The battalion was continuously hindered in the accomplishment of its construction mission by shortages in critical items of TOE construction equipment.

(b) EVALUATION: Among the shortages of major TOE items of equipment in this battalion are the following:

ITEMS	AUTHORIZED	O/H	MILSTRIP DATA	NUMBER OF TIMES REQUISITIONED
Compressor, 250 CFM	7	6	AT80TU-8154-2000	2
Compressor, 600 CFM	2	1	AT80TU-8171-2000	1
Crane, 20 ton, trk mtd	6	4	AT87FP-8317-1001	3
Drill, track	2	0	AT87FP-8314-1001	2
Loader, Scoop	9	6	AT87FP-8316-1002	7
Tractor, full tracked, D-7	14	11	AT80TU-8298-2037	1
Truck, tractor, 10 ton	26	17	AT80TU-8263-	1
Semi-trailer, 25 ton	24	10	AT80TU-8298-2042	3
Water Distributor	6	2	AT80TU-8298-2040	6

The impact of these critical shortage is a significant reduction in the mission capability for the battalion. The following actions have been taken in attempts to alleviate this problem:

(1) Valid requisitions and follow-up actions are in effect at the Cam Rahn Bay Depot.

(2) Available equipment is operated two shifts per day when feasible.

(3) Equipment is borrowed on hand receipt from other units when available.

(4) Normal density and PLR reports are submitted to 35th Engineer Group.

(5) Frequent command inquiries have been made.

(c) RECOMMENDATION: That these critical items be made available to this unit.

(2) Shortage of 25 Horsepower Outboard Motors:

(a) OBSERVATION: The 553rd Engineer Company (FB) is authorized twenty-four (24) 25 horsepower outboard motors and has none on hand.

(b) EVALUATION: Rafting and ferrying operations with the light tactical raft cannot be conducted without means to power the rafts or ferries. In the low, shallow tidal estuaries found on the central coast of Vietnam, rafting operations utilizing M4T6 rafts and bridge erection boats is impossible due to lack of water depth to operate the power boats. Power for the rafts in this instance should be provided by outboard motors mounted on the adaptor brackets.

(c) RECOMMENDATION: Since the 553rd Engineer Company (FB) is the only U.S. unit of its type in II CTZ, 25 horsepower motors be made available to this unit as soon as possible.

f. Organization: None

g. Other: None

RICHARD S. KEM
LTC, CE
Commanding

3 Incl
1. Organizational Chart, 577th EBC
2. Precast Culvert Extention Diagram
3. Checkdam Diagram

EGA-3 (31 Oct 68) 1st Ind
SUBJECT: Operational Report of 577th Engineer Battalion (Construction), for Period Ending 31 October 1968, RCS CSFOR-65 (R1)

DA, Headquarters, 35th Engineer Group (Const), APO 96312, 24 November 1968

TO: Commanding General, 18th Engineer Brigade, ATTN: AVBC-C, APO 96377

1. This headquarters has reviewed the Operational Report - Lessons Learned for the 577th Engineer Battalion (Const) for the quarterly period ending 31 October 1968. The report is considered an excellent summary of the battalion's activities for the reporting period.

2. This headquarters concurs with the remarks of the Battalion Commander.

DELBERT M. FOWLER
Colonel, CE
Commanding

AVBC-CS (31 Oct 68) 2nd Ind
SUBJECT: Operational Report of the 577th Engineer Battalion (Construction) for the Period Ending 31 October 1968, RCS CSFOR - 65 (R1)

DA, Headquarters, 18th Engineer Brigade, APO 96377 30 NOV 1968

TO: Commanding General, U.S. Army Vietnam, ATTN: AVHGC-DST, APO 96375

1. This headquarters has reviewed the Operational Report - Lessons Learned for the 577th Engineer Battalion (Construction), as indorsed by the 35th Engineer Group. The report is considered to be an excellent account of the Battalion's activities for the reporting period.

2. This headquarters concurs with the observations and recommendations of the Battalion and Group Commander, with the following comment added:

Reference, section 2 paragraph e, the unit has been advised that close adherence to current supply directives on major item requistions will help correct the difficulties now being experienced in obtaining critical equipment.

JOHN H. ELDER JR.
Colonel, CE
Commanding

AVHGC-DST (31 Oct 68) 3d Ind
SUBJECT: Operational Report of 577th Engineer Battalion (Construction), for Period Ending 31 October 1968, RCS CSFOR-65 (R1)

HEADQUARTERS, UNITED STATES ARMY, VIETNAM, APO San Francisco 96375 21 DEC 1968

TO: Commander in Chief, United States Army, Pacific, ATTN: GPOP-DT, APO 96558

1. This headquarters has reviewed the Operational Report-Lessons Learned for the quarterly period ending 31 October 1968 from Headquarters, 577th Engineer Battalion (Construction).

2. Comments follow:

a. Reference item concerning discrepancies in personnel records of overseas replacements, page 4, paragraph 2a. While the discrepancies noted in the records of incoming personnel are a matter of concern, responsibility rests with the losing command to forward complete documents and correct entries. This headquarters considers the provisions of AR 612-35 to be adequate. This item is a matter of concern for higher headquarters.

b. Reference item concerning shortage of critical items of TOE construction equipment, page 8, paragraph 2e(1): Concur with the recommendation contained in 2d Indorsement. A supply assistance team has been initiated and is presently assisting units in supply procedures.

c. Reference item concerning shortages of 25 horsepower outboard motors, page 9, paragraph 2e(2): Concur. Shipments of the motors have been delayed pending application of MWO. The motors should be available for shipment in December 1968.

FOR THE COMMANDER:

A.R. CUENTHER
CPT. AGC
ASST. ADJUTANT GENERAL

GPOP-DT (31 Oct 68) 4th Ind
SUBJECT: Operational Report of 577th Engineer Battalion (Construction), for Period Ending 31 October 1968, RCS CSFOR-65 (R1)

HQ, US Army, Pacific, APO San Francisco 96558 10 JAN 1969

TO: Assistant Chief of Staff for Force Development, Department of the Army, Washington, D. C. 20310

This headquarters has evaluated subject report and forwarding indorsements and concurs in the report as indorsed.

FOR THE COMMANDER IN CHIEF:

C. L. SHORTT
CPT, AGC
Asst AG

ORGANIZATIONAL CHART
577TH ENGINEER BATTALION (CONST) AND ATTACHED UNITS

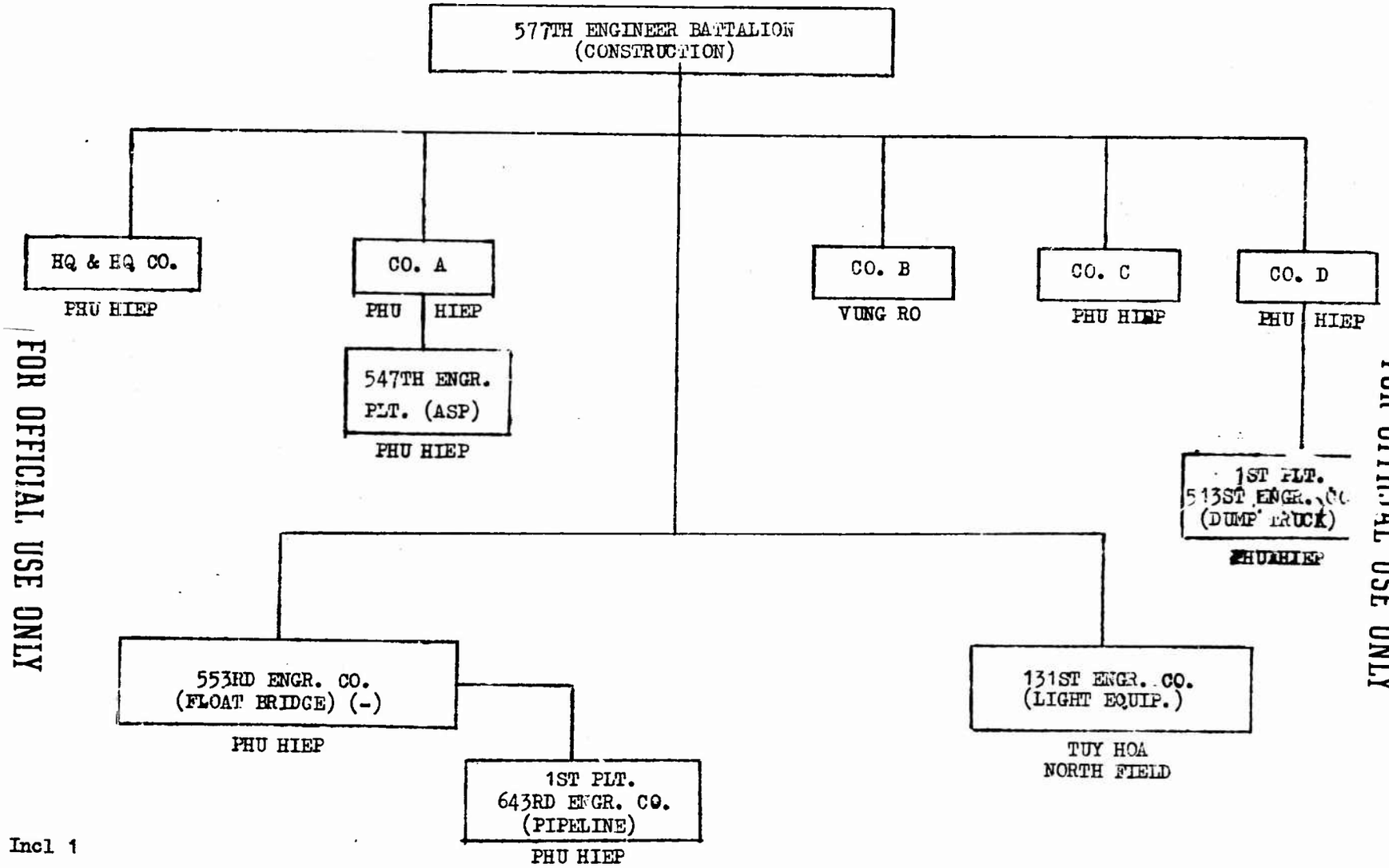

Incl 1

FOR OFFICIAL USE ONLY

FOR OFFICIAL USE ONLY

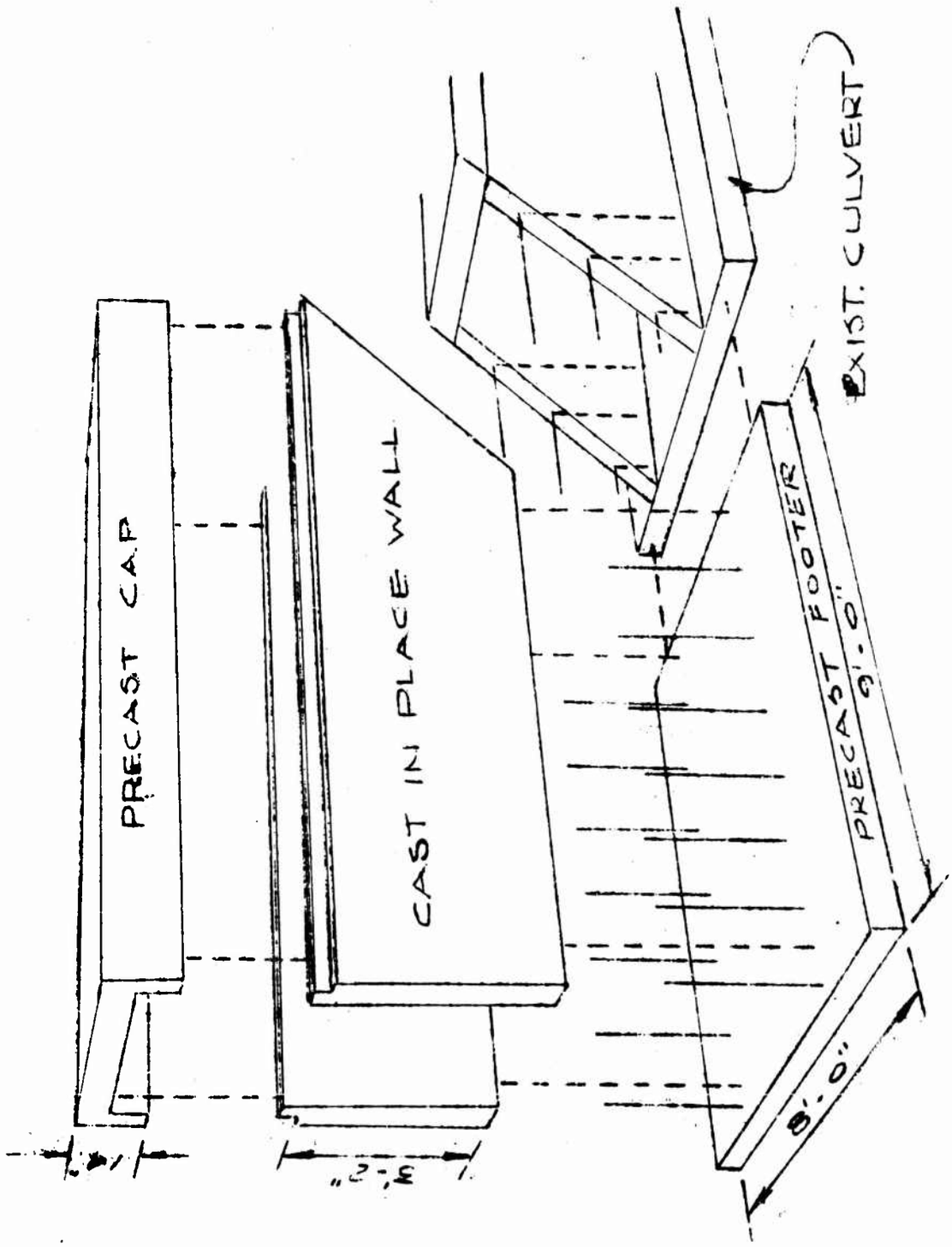

PRECAST CONCRETE CULVERT EXTENSION

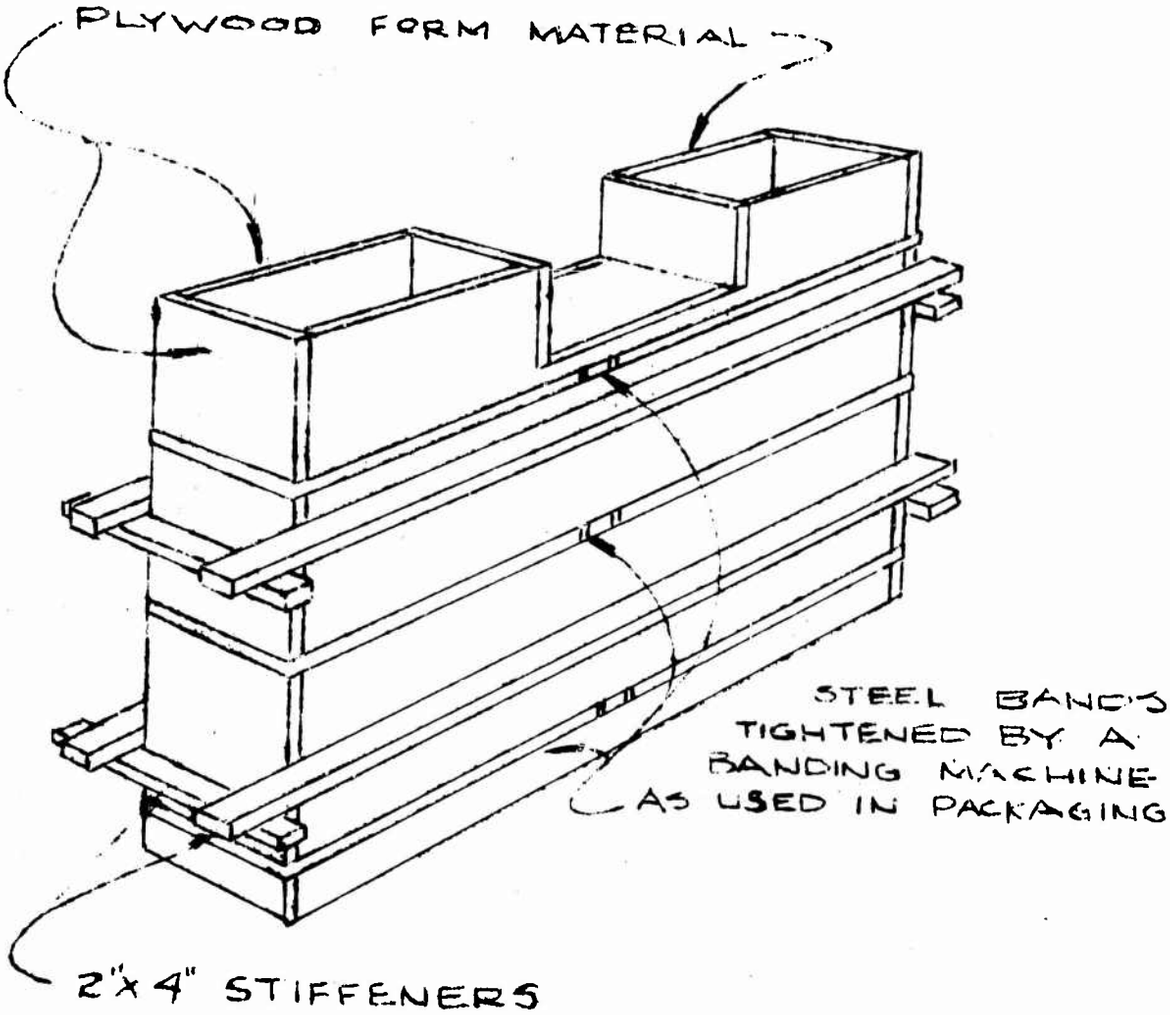

CHECKDAM FORM

UNCLASSIFIED

Security Classification

DOCUMENT CONTROL DATA - R & D

(Security classification of title, body of abstract and indexing annotation must be entered when the overall report is classified)

1. ORIGINATING ACTIVITY *(Corporate author)* HQ, OACSFOR, DA, Washington, D.C. 20310	2a. REPORT SECURITY CLASSIFICATION For Official Use Only 2b. GROUP

3. REPORT TITLE

Operational Report - Lessons Learned, Headquarters, 577th Engineer Battalion (Construction)

4. DESCRIPTIVE NOTES *(Type of report and inclusive dates)*

Experiences of unit engaged in counterinsurgency operations, 1 Aug - 31 Oct 68

5. AUTHOR(S) *(First name, middle initial, last name)*

CO, 577 Engineer Battalion (Construction)

6. REPORT DATE 31 October 1968	7a. TOTAL NO. OF PAGES 20	7b. NO. OF REFS
8a. CONTRACT OR GRANT NO. b. PROJECT NO. c. N/A d.	9a. ORIGINATOR'S REPORT NUMBER(S) 684137 9b. OTHER REPORT NO(S) *(Any other numbers that may be assigned this report)*	

10. DISTRIBUTION STATEMENT

11. SUPPLEMENTARY NOTES N/A	12. SPONSORING MILITARY ACTIVITY OACSFOR, DA, Washington, D.C. 20310

13. ABSTRACT

DD FORM 1 NOV 65 1473

UNCLASSIFIED

Security Classification