AD-766 810

TWO-STAGE LIGHT-GAS GUN INSTALLATION FOR HYPERVELOCITY IMPACT STUDIES

S. Jeelani, et al

North Carolina State University

Prepared for:

Office of Naval Research

September 1973

DISTRIBUTED BY:

NTIS

National Technical Information Service
U. S. DEPARTMENT OF COMMERCE
5285 Port Royal Road, Springfield Va. 22151

AD 766810

TWO-STAGE LIGHT-GAS GUN INSTALLATION FOR HYPERVELOCITY IMPACT STUDIES

S. Jeelani, J. J. Kelly, J. K. Whitfield, R. A. Douglas

Technical Report 73-3 September, 1973

DDC
RECEIVED
SEP 21 1973
C

UNDER RESEARCH PROJECT
DYNAMIC MATERIAL RESPONSE

Reproduced by
NATIONAL TECHNICAL
INFORMATION SERVICE
US Department of Commerce
Springfield, VA. 22151

DISTRIBUTION STATEMENT A
Approved for public release;
Distribution Unlimited

Prepared for
Office of Naval Research
Contract N00014-68-A-0187
(NR 064-504)

Best Available Copy

58

Unclassified
Security Classification

DOCUMENT CONTROL DATA - R & D

(Security classification of title, body of abstract and indexing annotation must be entered when the overall report is classified)

1. ORIGINATING ACTIVITY (Corporate author) NORTH CAROLINA STATE UNIVERSITY Raleigh, North Carolina	2a. REPORT SECURITY CLASSIFICATION Unclassified 2b. GROUP

3. REPORT TITLE

TWO-STAGE LIGHT-GAS GUN INSTALLATION FOR HYPERVELOCITY IMPACT STUDIES

4. DESCRIPTIVE NOTES (Type of report and inclusive dates)

Technical Report

5. AUTHOR(S) (First name, middle initial, last name)

S. Jeelani, J. J. Kelly, J. K. Whitfield, R. A. Douglas

6. REPORT DATE September 1973	7a. TOTAL NO. OF PAGES ~~50~~ 1 8	7b. NO. OF REFS 11
8a. CONTRACT OR GRANT NO N00014-68-A-0187 b. PROJECT NO c. d.	9a. ORIGINATOR'S REPORT NUMBER(S) 73-3 9b. OTHER REPORT NO(S) (Any other numbers that may be assigned this report)	

10. DISTRIBUTION STATEMENT

Approved for public release; Distribution unlimited.

11. SUPPLEMENTARY NOTES	12. SPONSORING MILITARY ACTIVITY Office of Naval Research

13. ABSTRACT

This report describes a constant base pressure two-stage light-gas gun system installed at North Carolina State University at Raleigh for studying hypervelocity impact phenomena. The gun uses helium gas as propellant and can produce velocities up to 20,000 feet per second.

A description of the problems encountered in developing the experimental facility and solutions developed to meet these problems are presented. The components which were designed by the authors include target support, breech support, gas deflector, impact chamber extension, piston and projectile. These components are unique to this installation and have facilitated target alignment, optical measurements and firing the gun.

It is hoped that the information contained herein may prove of value to others who go through the process of developing a similar facility.

iii

Unclassified
Security Classification

14 KEY WORDS	LINK A ROLE	LINK A WT	LINK B ROLE	LINK B WT	LINK C ROLE	LINK C WT
Hypervelocity impact						
Two-stage light-gas gun						
Impact tube						
Catcher tank						
Breech support						
High pressure section						
Pump tube						
Launch tube						
Velocity						
Projectile						

DD FORM 1 NOV 65 1473 (BACK)

S/N 0101-807-6821

Unclassified
Security Classification

iv

NORTH CAROLINA STATE UNIVERSITY
Raleigh, North Carolina

TWO-STAGE LIGHT-GAS GUN INSTALLATION FOR HYPERVELOCITY IMPACT STUDIES

S. Jeelani, J. J. Kelly, J. K. Whitfield, R. A. Douglas

Technical Report 73-3 September, 1973

Prepared for

Office of Naval Research
Contract N00014-68-A-0187
(NR 064-504)

1 September 1967 - 31 August 1974

under a project entitled

DYNAMIC MATERIAL RESPONSE

Approved for public release; Distribution unlimited.

ABSTRACT

This report describes a constant base pressure two-stage light-gas gun system installed at North Carolina State University at Raleigh for studying hypervelocity impact phenomena. The gun uses helium gas as propellant and can produce projectile velocities up to 20,000 feet per second.

A description of the problems encountered in developing the experimental facility and solutions developed to meet these problems are presented. The components which were designed by the authors include target support, breech support, gas deflector, impact chamber extension, piston and projectile. These components are unique to this installation and have facilitated target alignment, optical measurements and firing the gun.

It is hoped that the information contained herein may prove of value to others who go through the process of developing a similar facility.

TABLE OF CONTENTS

		Page
	ABSTRACT	
	LIST OF ILLUSTRATIONS	
I.	INTRODUCTION	1
II.	TWO-STAGE LIGHT-GAS GUN	6
III.	DESIGN OF SYSTEM COMPONENTS UNIQUE TO THIS INSTALLATION	9
	1. Target support	10
	2. Gas deflector	17
	3. Impact chamber extension	25
	4. Breech support	25
	5. Projectile and piston	26
	6. Impact tube	30
IV.	SELECTION OF POWDER CHARGE, GAS PRESSURE, PISTON WEIGHT AND PROJECTILE WEIGHT	33
V.	SYSTEM OPERATION AND MAINTENANCE	34
VI.	REFERENCES	36
VII.	APPENDICES	37
	A. Details of Two-Stage Light-Gas Gun Components	37
	B. Powder Weight, Helium Gas Pressure and Piston Weight for Projectiles of Known Weight and Predicted Muzzle Velocities	42

LIST OF ILLUSTRATIONS

		Page
1.	Assembled view of the two-stage light-gas gun.	4
2.	Two-stage light-gas gun.	5
3.	Two-stage light-gas gun.	7
4.	Assembly of launch tube, impact chamber and catcher tank . .	11
5.	A simplified version of the support system	12
6.	Primary and secondary gas deflector, impact chamber extension and target support system	18
7.	(a) Ten gram projectiles used with 3/4" launch tube	27
	(b) Five gram low density polyethylene projectile	27
	(c) Five gram nylon projectile for 3/4" launch tube	27
8.	Piston and cap	29
9.	Piston and projectiles	29
10.	Modified impact tube	31
11.	Assembly of pump tube, breech and firing mechanism	38
12.	Assembly of pump tube, high pressure section and launch tube	40

I. INTRODUCTION

Technical Reports [1] and [2] presented a detailed design and performance of 16 mm, 19 mm and 50 mm powder gun accelerator systems designed and installed at North Carolina State University for studying axial impact phenomena. These accelerators have proved to be suitable for impact studies because of their simplicity, velocity reproducibility and quietness during firing. The 16 mm accelerator has been used successfully for producing projectile velocities from 650 ft/sec to 2000 ft/sec employing projectiles weighing from .625 oz. to 4 oz. The 19 mm accelerator, which is a modified version of the 16 mm system, has been used to produce projectile velocities up to 1760 ft/sec and projectiles weighing up to 4.5 oz. have been accelerated. The 50 mm accelerator system, which is functionally similar to the 16 mm and 19 mm systems, although somewhat different in appearance, has been installed and successfully fired several times. This accelerator is designed to accelerate a 3 pound projectile to a muzzle velocity of 3500 ft/sec, or a one-half pound projectile to a muzzle velocity of 8500 ft/sec using a maximum powder charge of 850 grams in each case.

A major part of the earlier experimental activity, [3], [4], [5], [6], under this research project consisted of the determination of the large axial strains, surface rotations, strain rates and plastic wave velocities during axial impacts at striker velocities up to 2000 ft/sec. The measurement system employed in-surface plane diffraction gratings which were illuminated by a pulsed laser. High speed streak cameras were used to record the time dependent surface deformation diffraction pattern. Strain

vs time and plastic wave velocity vs time data were obtained [4] for axial impacts of polycarbonate (Lexan) rods at projectile velocities ranging from 1071 ft/sec to 1810 ft/sec. Strain vs time and plastic wave velocity vs strain data were obtained [5] for axial impacts of fully annealed 1100F aluminum rods at projectile velocities ranging from 89 ft/sec to 788 ft/sec.

In the years following the World War II, which saw the advent of manned and unmanned space vehicles, the interest in attainable velocities for atmospheric and space flight grew from about 1000 ft/sec to 50,000 ft/sec. With the coming of the space age, scientists are faced with various technical problems associated with high-speed flight. One of the major considerations in space-vehicle design is the effect of high-speed impact of meteorite particles on the vehicle. Such high-speed impacts are generally termed "Hypervelocity Impacts" [7]. To keep pace with the requirements of space-vehicle design it was decided to extend the activities of this research project to the study of material behavior under hypervelocity impact. In order to study these phenomena, it was necessary to have controlled laboratory means of accelerating known masses to velocities over 20,000 ft/sec.

The powder accelerators mentioned earlier could not produce such high muzzle velocities. Due to the velocity limitations on these accelerators, it was decided to employ a two-stage light-gas fun, wherein a low molecular weight gas such as Helium or Hydrogen is used as a propellant gas. This type gun gives very high projectile velocity because less energy is absorbed in accelerating the gas and correspondingly more energy is imparted to the

projectile.

Fabrication of a light-gas gun involves accurate machining of very long barrels which is not possible in the usual university environment with limited shop facilities. Therefore, a constant base pressure two-stage light-gas gun was purchased from Utah Research and Development Company at Salt Lake City, Utah. The gun as received consisted of breech mechanism, pump tube, two high pressure sections, two launch tubes, an impact chamber and a catcher tank. See Figures 1 and 2 and Appendix A for details of these components. The gun was installed, aligned and test-fired by the Utah Research and Development Company personnel with the assistance of the project personnel. For the study of hypervelocity impact of cylindrical compressional bars, the system had to be developed further. The components which were designed by the authors include target support, breech support, gas deflector, impact chamber extension, piston and projectile. These components are unique to this installation and have facilitated target alignment, optical measurements and firing the gun. See Section III for detailed design of these components.

This report gives a description of the problems encountered in developing an experimental facility for study of material response to hypervelocity impact and details the solutions developed to meet the problems. It is hoped that the information contained herein may prove of value to others who go through the process of developing a similar facility.

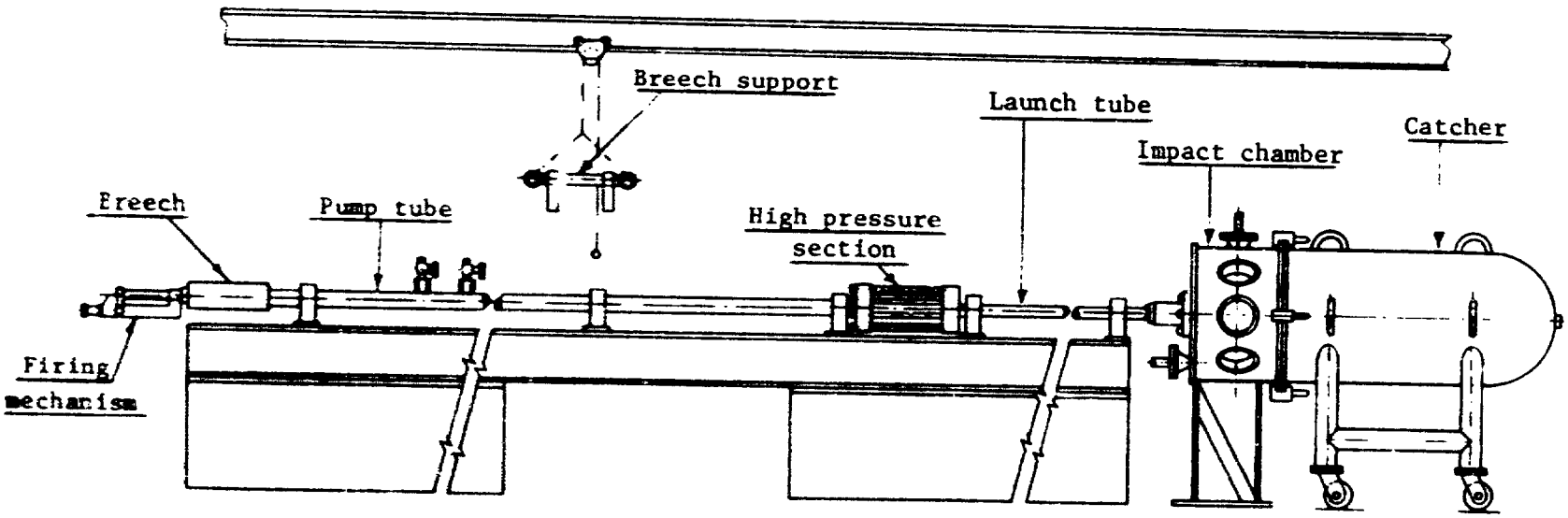

Figure 1. Assembled view of the two-stage light-gas gun

SCALE: 1/50th full size

Figure 2. Two-stage light-gas gun

II. TWO-STAGE LIGHT-GAS GUN

Presentation of theory and design of a two-stage light-gas gun is not within the scope of this report. However, functioning of the gun is described for the benefit of the reader not familiar with a gun of this type.

A simplified version of the two-stage light-gas gun is shown in Figure 3. The first stage consists of a large bore pump tube, on one end of which a heavy walled breech is mounted. The breech encloses gun powder which can be ignited by actuating a firing mechanism. The other end of the pump tube is connected to a heavy walled high pressure section which is in turn connected to a smaller bore launch tube usually known as the second stage of the gas gun. The muzzle end of the launch tube projects into the impact chamber and catcher tank, which are not shown in Figure 3. The projectile is placed at the high pressure section end of the launch tube which has a shear disc held against its end face. The piston is placed at the breech end of the pump tube, which also has a shear disc placed against its end face. The launch tube is evacuated to minimize air resistance during acceleration of the projectile. The volume of the pump tube between the projectile and the piston is filled with a light gas (in this case helium; see Section IV for reasons for using helium as propellant) to a predetermined initial pressure.

When the gun is fired, the products of combustion in the breech expand and attain a pressure at which the shear disc is ruptured. The powder gases, then, start pushing the piston down the pump tube, thereby compressing the helium gas. When the piston approaches the high pressure

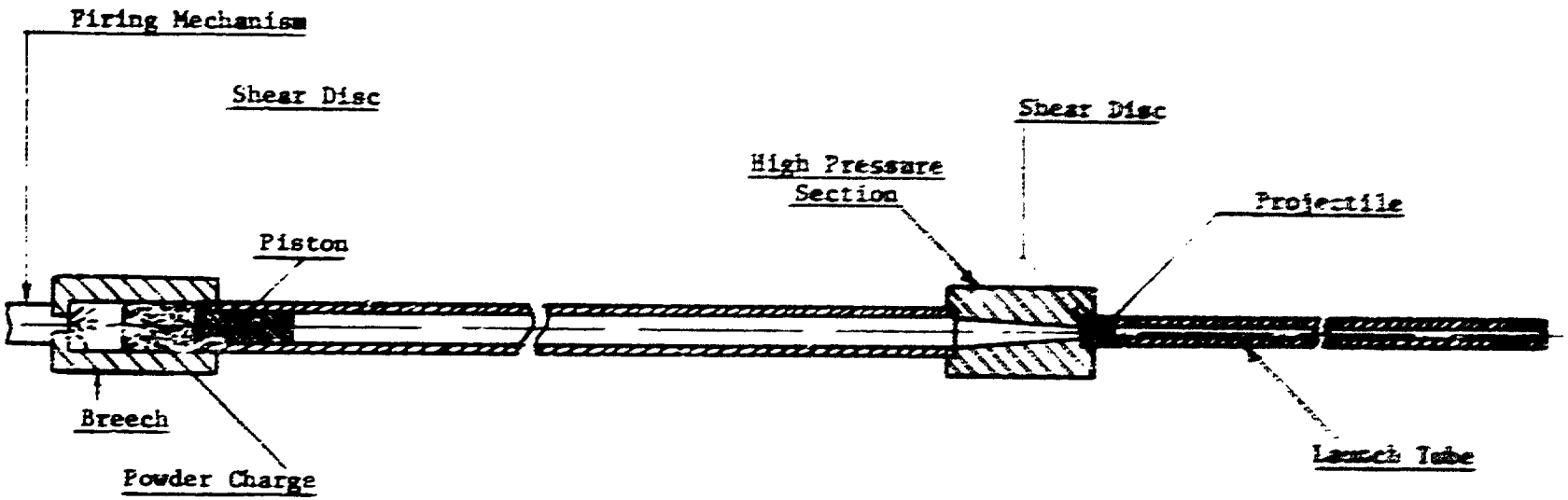

Figure 3. Two-stage light-gas gun

section, the helium gas pressure becomes high enough to rupture the shear disc. Now the projectile moves down the launch tube, accelerated by the high pressure helium gas. The piston is stopped by the tapered high pressure section where the residual kinetic energy of the piston is dissipated partly in plastic deformation of front end of the piston into a conical shape and partly in friction between the piston and inner walls of the high pressure section. The piston on occasions is extruded into the launch tube when the former reaches the high pressure section with very high momentum.

The necessary details of the components of the two-stage light-gas gun, as received from Utah Research and Development Company, are shown in Appendix A.

III. DESIGN OF SYSTEM COMPONENTS UNIQUE TO THIS INSTALLATION

After the two-stage light-gas gun was installed and test fired, efforts were devoted to development and instrumentation of the system for obtaining strain vs time information during axial impact of cylindrical bars. The first objective was the recording of the axial compressive strain vs time data from single and multiple axial plane diffraction gratings during hypervelocity impact.

The following design requirements were established as essential to the achievement of the above objective.

1. Accurate alignment of the target specimen with respect to the bore of the launch tube is required to insure coaxial impact.

2. Optical access is necessary for the incident laser beam to and the diffracted orders from the diffraction gratings.

3. The propelling Helium gas must be vented or diverted from behind the projectile prior to impact to remove the possibility of its presence causing extraneous optical effects at the impact site during impact, and to provide free-flight impact conditions.

4. There must be no radial restriction of the target and the projectile during impact, at least until the optical measurements are completed.

5. The target must be of sufficient length so that any reflected wave does not reach the grating until the optical measurements are completed.

After considering several preliminary design concepts and studying their feasibility based on the above requirements, the system components described in the following sub-sections were designed. These components make the two-stage light-gas gun system a unique facility for studying hypervelocity impact of bars. The components can be easily dismantled and detached from the gun system if it is desired to use the latter for studying any other hypervelocity impact phenomena such a impact of plates, generation of plane shear and tensile waves, etc.

1. Target Support

In addition to the above five requirements, the target support system must meet three more essential requirements. They are:

6. Vertical deflection of the support system should be very small so that the grating remains illuminated for the entire period of the optical measurements. (The diffraction grating is viewed through a narrow horizontal slit. Vertical movement of the target is liable to move the grating out of the optical path.)

7. The horizontal deflection of the support system must be confined to one or two inches.

8. The natural frequency of the support system must be very low so that the period of oscillation is longer than the duration of optical measurements.

The target support system which was designed is shown in Figure 4. It consists of a thick walled cold drawn mechanical tubing, hereafter referred to as impact tube, clamped in two heavy cold rolled steel blocks

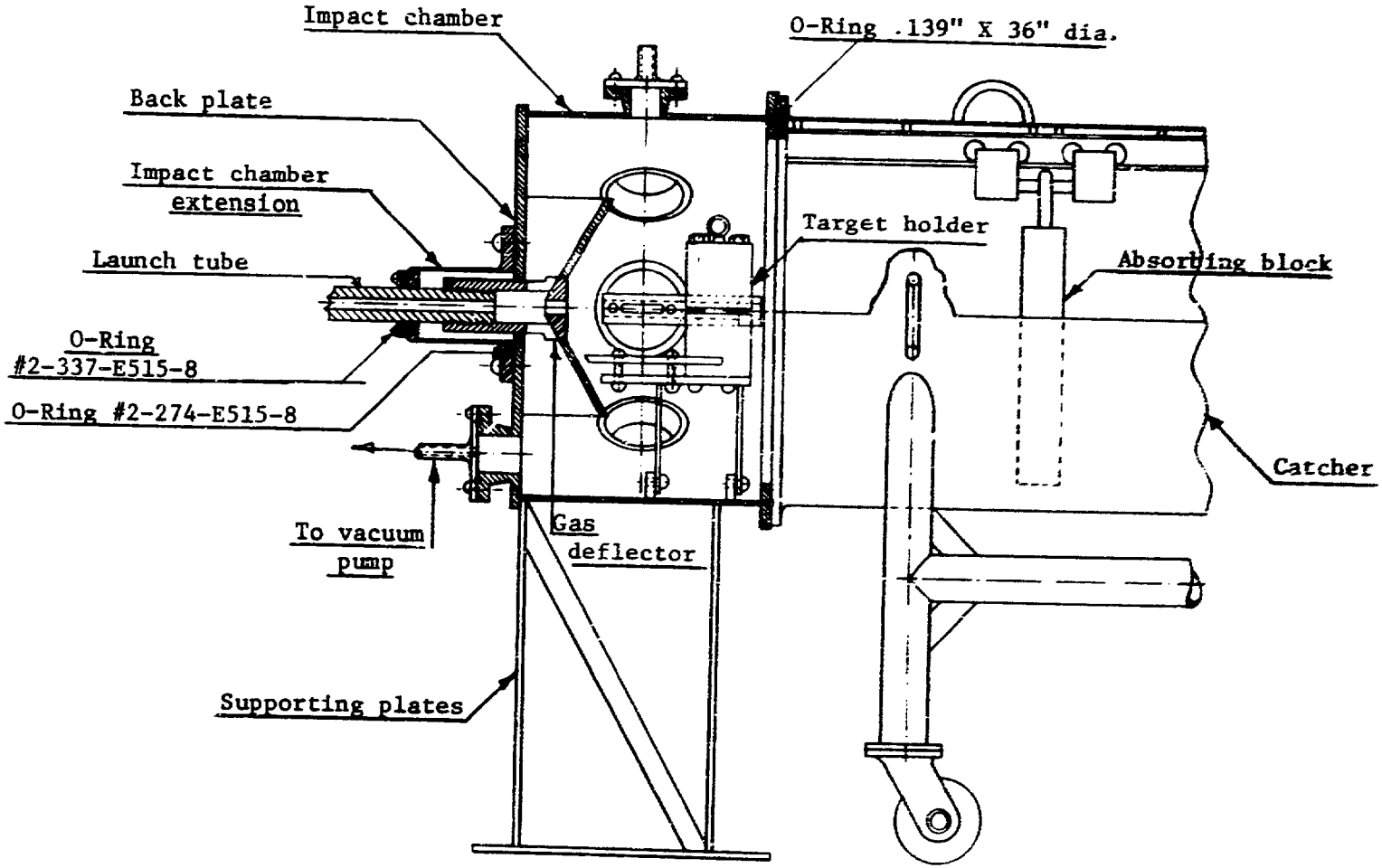

Figure 4. Assembly of launch tube, impact chamber and catcher tank

SCALE: 1/16th full size

machined to hold the impact tube. The lower support block is bolted to a thick base plate which is welded to a pair of thin vertical support legs. The support legs are bolted to a set of lugs in the impact chamber. The target support system was designed based on the assumption that a 10 gram projectile would be accelerated up to 20,000 ft/sec muzzle velocity. The support system was designed to absorb the entire kinetic energy of the projectile in case the projectile hits the support system due to some misalignment.

A simplified version of the target support is shown in Figure 5 for the puspose of analysis.

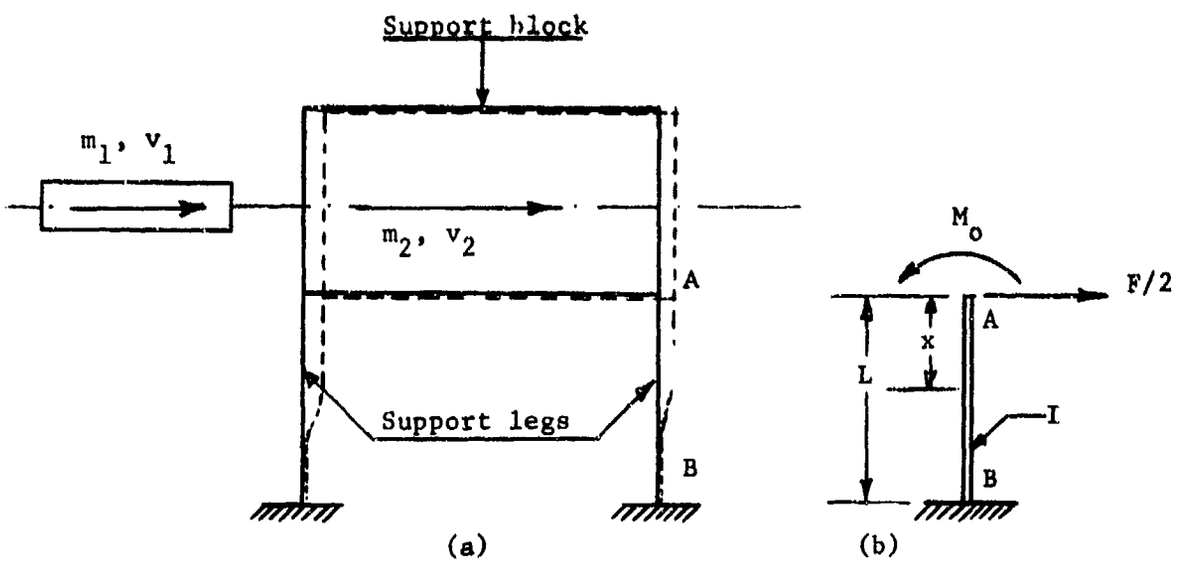

Figure 5. A simplified version of the support system.

The slopes at the ends of the support legs can be considered equal to zero during deflection, in which case the block moves as indicated in

Figure 5 (a). The following analysis will show the energy absorption process in case the projectile hits the support block:

let

m_1 = mass of the projectile

v_1 = muzzle velocity of the projectile

m_2 = mass of the support block

v_2 = velocity of the support block after impact.

$$v_2 = \frac{m_1 v_1}{m_2} \tag{1}$$

m_1 = 10gm = 2.205×10^{-2} pounds ,

v_1 = 20,000 ft/sec ,

m_2 = 130 pounds (assumed)

$$\therefore V_2 = \frac{(2.205 \times 10^{-2})\ (20{,}000)}{130} = 3.4 \text{ ft/sec}$$

$$\text{K.E. of the support block} = \frac{1}{2} m_2 v_2^2 \tag{2}$$

$$= \frac{1}{2} \frac{130}{32.2} 3.4^2$$

$$= 23.4 \text{ feet/pounds} \quad .$$

Let the horizontal force on each leg be F/2.

Referring to Figure 5 (b)

$$M = \frac{Fx}{2} - Mo \tag{3}$$

where

M = bending moment in the leg at a distance x from end A in the figure ,

and

Mo = moment at A required to maintain zero slope .

Elastic strain energy U stored in the legs during deflection of the support system is,

$$U = 2\int_{o}^{L} \frac{M^2 dx}{2EI} \tag{4}$$

where E is the Young's modulus of elasticity of the material of the legs.

I = moment of inertia of the cross-section of the legs.

According to Castigliano's theorem [9],

$\frac{\partial U}{\partial Mo} = 0$, for slope at A to be zero.

therefore, from equation (4)

$$\frac{\partial U}{\partial Mo} = 2\int_{o} \frac{2M}{2EI} \frac{\partial M}{\partial Mo} dx = 0 \tag{5}$$

from equation (3),

$$\frac{\partial M}{\partial M_o} = -1 \quad . \tag{6}$$

Substitution for M and $\frac{\partial M}{\partial M_o}$ in equation yields

$$\int_{o}^{L} M_o - \frac{Fx}{2} dx = 0$$

$$\therefore M_o = \frac{FL}{4} \tag{7}$$

substitution for M_o in equation (3) yields

$$M = \frac{Fx}{2} - \frac{FL}{4} \tag{8}$$

and

$$M_B = \frac{FL}{2} - \frac{FL}{4} = \frac{FL}{4} \tag{9}$$

where M_B is the moment at point B in Figure 5 (b).

From simple beam theory,

$$\frac{M_B}{I} = \frac{\sigma}{.5t} \tag{10}$$

where $I = \frac{bt^3}{12}$, σ = maximum bending stress.

substitution for M_b in equation (9) yields,

$$F = \frac{8I\sigma}{Lt} \tag{11}$$

from equations (3) and (4)

$$U = \frac{F^2}{16EI} \int_0^L (4n^2 - 4Lx + L^2)\, dx$$

$$= \left(\frac{F^2}{16EI} \quad \frac{4x^3}{3} - \frac{4Lx^2}{2} + L^2 n\right)_0^L$$

$$\therefore\ U = \frac{F^2 L^3}{48EI} \tag{12}$$

and from equations (11) and (12)

$$U = \frac{\sigma^2}{9E}\, btL \tag{13}$$

σ = 80,000 psi, E = 30 x 10^6 psi, L = 12"

$$\therefore\ U = \frac{64 \times 10^8}{9 \times 30 \times 10^6} \times 12\ (bxt) \text{ inch-pounds} \quad ,$$

$$U = \frac{640}{27}\ (\text{area}) \text{ foot-pounds} \quad ,$$

$$\therefore\ \text{area} = \frac{27U}{640}$$

U = 23.4 foot-pounds, the kinetic energy to be absorbed

$$\therefore\ \text{area} = \frac{27 \times 23.4}{640}$$

$$= 1.024 \text{ in}^2$$

Therefore 1.024 in^2 is the minimum cross-sectional area required for the abscrption of the kinetic energy of 23.4 foot-pounds.

The cross-sectional area of the legs in Figure 4 is 1.5 in^2 ($\frac{1}{4}$" x 6") which is satisfactory.

From Castigliano's theorem the deflection δ of the support system is expressed as

$$\delta = \frac{\partial U}{\partial F} 2\int_0^L \frac{1}{2EI}(2M) \left(\frac{\partial M}{\partial F}\right) dx \tag{14}$$

from equation (8)

$$M = \frac{F}{4} (2x-L)$$

$$\frac{\partial M}{\partial F} = \frac{1}{4} (2x-L) \tag{15}$$

substitution for M and $\frac{\partial M}{\partial F}$ in equation (14) yields

$$\delta = \frac{F}{8EI}\int_0^L (4x^2 - 4Lx + L^2)\, dx$$

$$\therefore \delta = \frac{FL^3}{24EI} \tag{16}$$

but

$$F = \frac{8I\sigma}{Lt}$$

$$\therefore \delta = \frac{\sigma L^2}{3Et} \tag{17}$$

σ = 80,000 psi, L = 12 in., E = 30 x 10^6 psi, t = $\frac{1}{4}$ in.

$\therefore \delta$ = 0.512 in.

If ω_n is the natural frequency and K is the spring constant of the target support system,

$$\omega_n = \frac{K}{m_2} \tag{18}$$

where

$$K = \frac{F}{\delta} = \frac{24EI}{L^3}$$

$$\therefore \omega_n = \frac{24EI}{m_2 L^3}$$

$$m_2 = \frac{130}{g},\ g = 386,\ L = 12,\ E = 30 \times 10^6,\ I = \frac{1}{128}$$

$$\therefore \omega_n = 98.4 \text{ radians/sec}$$

$$\text{or } \omega_n = 16 \text{ cycles/sec}$$

Therefore, the support system meets the requirements. The actual weight of the block including impact tube and base plate is 139 pounds as against 130 pounds assumed value for calculation.

2. Gas Deflector

The gas deflector shown in Figures 4 and 6 was designed assuming that a 10 gram projectile will be accelerated to a maximum velocity of 20,000 feet per second. Under these conditions the propellant helium gas leaves the launch tube muzzle at a pressure of approximately 31,000 pounds per square inch and a temperature of 4320° Rankine. (These values for pressure and temperature were determined from the prediction relations derived by John S. Curtis of General Motors Defense Laboratory [8].) At this high

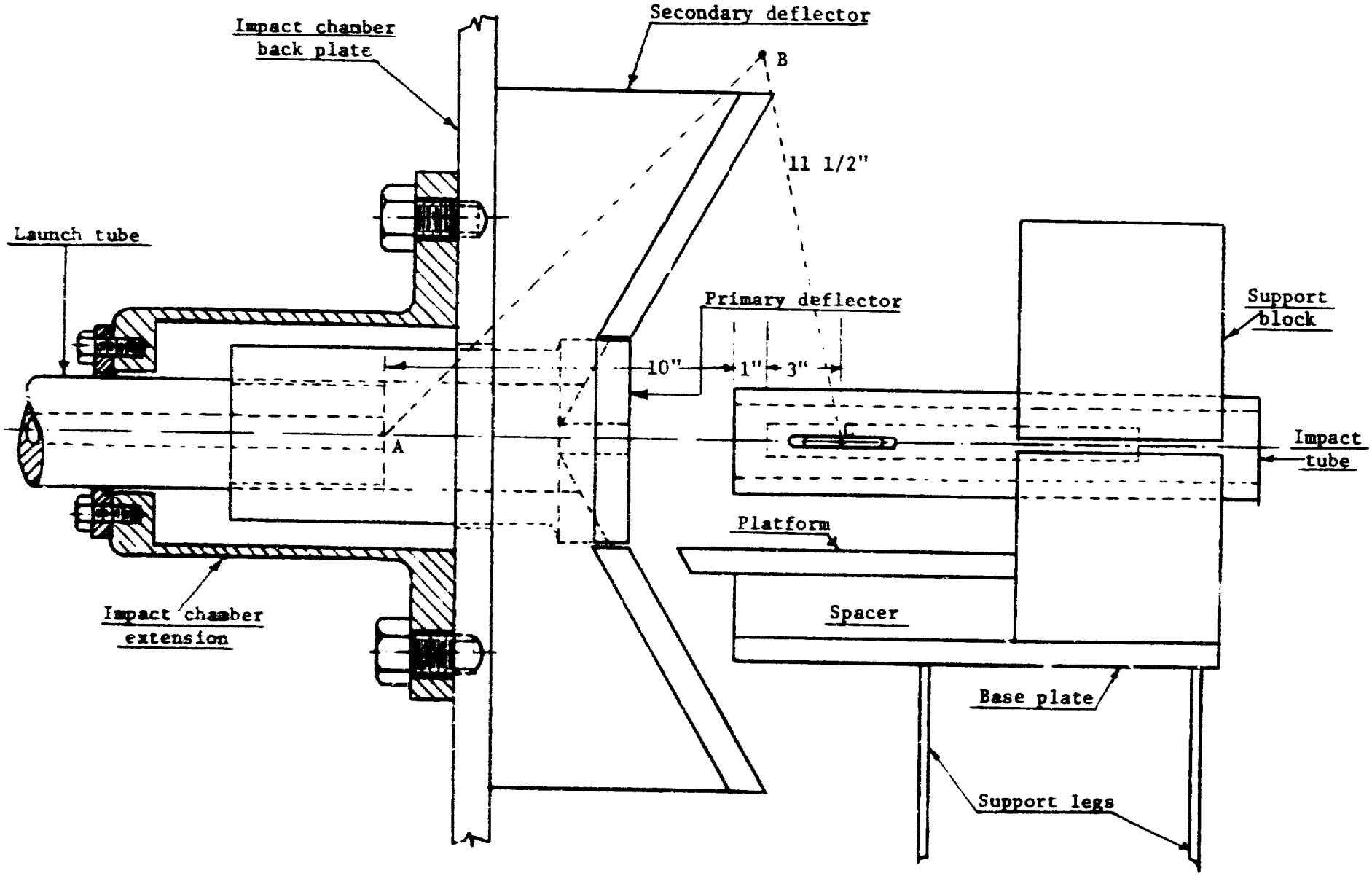

Figure 6. Primary and secondary gas deflector, impact chamber extension and target support system

temperature and pressure, helium gas can travel faster than the projectile and reach the diffraction grating before the optical measurements are completed. The presence of high pressure helium at the impact site not only destroys the conditions for free flight impact but also disturbs the light path. The purpose of the gas deflector, which consists of a primary and a secondary part, is to reduce the energy of the gas by expanding it in the primary and secondary chambers and to deflect the flow path of the gas so that it reaches the impact site after the measurements are completed. It is assumed that the gas expands in the primary and secondary deflectors adiabatically. The following calculations explain the thermodynamic processes which take place in the gas deflector.

Pump tube volume = $V_p = \frac{\pi}{4} D^2 L$

$D = 2$ in., $L = 20$ feet

$V_p = 240\ \pi$ cubic inches

Compression ratio = 24, from [8]

Therefore, volume of helium at the end of compression = $240\pi/24 = 10$ cu.in.

let V_ℓ, P_ℓ and T_ℓ represent the volume, pressure and temperature of the helium gas leaving the launch tube respectively, and V_1, P_1 and T_1 represent the state of the gas at the end of adiabatic expansion in the primary deflector. The law of adiabatic expansion for helium can be expressed as $P_1 V_1^{1.66}$ = constant, where 1.66 is the ratio of specific heats at constant pressure and constant volume. Therefore,

$$P_\ell V_\ell^{1.66} = P_1 V_1^{1.66} \tag{19}$$

V_ℓ = 10 + volume inside the launch tube

$= 10\pi + \frac{\pi}{4}\left(\frac{3}{4}\right)^2 \times 120 = 84.4$ cu. in.

$P_\ell = 31{,}000$ psi, $T = 4320°$ Rankine

$V_1 = 84.4$ + volume inside the primary deflector

$\therefore V_1 = 84.4 + \frac{\pi}{4}(3)^2 \times 5 = 119.7$

Now from equation (19)

$$P_1 = P_\ell \left(\frac{V_\ell}{V_p}\right)^{1.66} \tag{20}$$

$$\therefore P_1 = 31{,}000 \left(\frac{84.4}{119.7}\right)^{1.66} = 17{,}300 \text{ psi}$$

Since helium approximates a perfect gas, its equation of state can be written as

$$Pv = mRT \tag{21}$$

where m = mass of the gas occupying volume v at pressure P.

R = gas constant $\frac{\text{foot-pound force}}{\text{pound mass - degree Rankine}}$

T = absolute temperature in degrees Rankine

From equation (21)

$$\frac{P_\ell V_\ell}{T} = \frac{P_1 V_1}{T_1} \tag{22}$$

$$\therefore T_1 = \frac{P_1 V_1}{P_\ell V_\ell} T_\ell \tag{23}$$

substitution of values for P_1, P_2, V_1, V_2 and T_2 in equation (23) yields

$$T_1 = \left(\frac{17,300}{31,000}\right)\left(\frac{119.7}{84.4}\right) 4320 = 3420°R$$

While the gas expands in the primary chamber, a portion of it escapes through the projectile passage following the projectile, the amount depending on the ratio between the area of projectile passage and the total exit area of the primary deflector. The primary gas deflector, in this respect, acts as a muzzle brake [9]. The weight of the gas that flows through the projectile passage is given by [9].

$$W_b = \frac{A_b}{2A_e + A_b} W_g \tag{24}$$

where

W_g = total weight of the propellant gas

W_b = weight of the gas flowing through the projectile passage

A_b = area of projectile passage

A_e = exit area of one wing of the primary deflector

The projectile passage is 7/8 inch in diameter so that there is a radial clearance of 1/16 inch when a 3/4 inch diameter projectile is accelerated. A sleeve can be used to reduce the projectile passage to 3/4 inch diameter if a 1/2 inch diameter projectile is accelerated. The radial clearance of 1/16 inch is provided so that the projectile does not strike the primary deflector or the walls of the projectile passage due to any misalignment or tilting during its free flight, although an increase in the projectile passage results in a decrease in the efficiency of the deflector.

A_e = 0.625 square inch, A_b = 0.615 square inch for 3/4 inch diameter projectile and A_b = 0.442 square inch for 1/2 inch diameter projectile. From equation (24), W_b = .032 W_g for 3/4 inch diameter projectile and W_b = .015 W_g for 1/2 inch diameter projectile, which means that only 4.3 and 3.2 percent of the propellant gas flows through the projectile passage in the case of 3/4 inch and 1/2 inch diameter projectiles respectively, while the major portion of the gas is deflected into the secondary deflector. To simplify the calculations, it is assumed that all of the propellant gas is deflected into the secondary deflector and the expansion of the gas is again adiabatic:

Let P_2, V_2 and T_2 represent the rate of the gas at the end of adiabatic expansion in the secondary deflector.

Now,

$$P_2 V_2^{1.66} = P_1 V_1^{1.66}$$

$$\therefore P_2 = P_1 \left(\frac{V_1}{V_2}\right)^{1.66} \qquad (25)$$

$V_2 = V_1$ + volume of the secondary deflector

$V_2 = V_1 + 6[7(7.5 + 3.313)]$

$= 119.7 + 455 = 574.7$ cubic inch .

Substitution of values for P_1, V_1 and V_2 in equation (25) yields

$$P_2 = 17{,}300 \left(\frac{119.7}{574.7}\right)^{1.66}$$

$= 1280$ pounds per square inch .

The transformation of state can be expressed as

$$\frac{P_1V_1}{T_1} = \frac{P_2V_2}{T_2}$$

$$\text{or} \quad T_2 = T_1 \left(\frac{P_2}{P_1}\right) \left(\frac{V_2}{V_1}\right) \tag{26}$$

$$\therefore T_2 = 3420 \left(\frac{1280}{17300}\right) \left(\frac{574.7}{119.7}\right)$$

$$= 1215°R \quad .$$

The shortest distance the deflected gas has to cover before reaching the diffraction grating is ABC in Figure 6. The velocity of the gas decreases continuously along the paths AB and BC since the temperature of the gas which has a direct bearing on its sonic velocity decreases along these paths. To simplify the calculations, however, it is assumed that the temperature of the gas remains T_1 (3420) along AB and T_2 (1215) along BC. Velocity C_1 of the gas along AB is given by [10]

$$C_1 = \sqrt{KgRt_1}$$

where

K = ratio of specific heats = 1.66

g = acceleration due to gravity

$= 32.17 \dfrac{\text{pound mass-foot}}{\text{pound force-second}^2}$

R = specific gas constant for helium

$= 386 \dfrac{\text{foot-pound force}}{\text{pound mass-degree Rankine}}$.

$$\therefore C_1 = \sqrt{(1.66)(32.17)(386)(3420)}$$

$$= 8400 \text{ feet per second}$$

Let C_2 represent the sonic velocity of the gas along path BC, then

$$C_2 = \sqrt{KgRT_2}$$

$$= \sqrt{(1.66)(32.17)(386)(1215)}$$

$$= 5000 \text{ feet per second} \quad .$$

From Figure 6, AB = 15 1/2 and BC = 11 1/2". Therefore, total time t required for the gases to reach C is

$$t = \frac{AB}{C_1} + \frac{BC}{C_2}$$

$$= \frac{15.5}{12x8400} + \frac{11.5}{12x5000} = 346 \text{ microseconds} \quad .$$

The location of a Lexan target is shown in Figure 6. The impact end (nose) of the target specimen is one inch from the left end of the impact tube while the grating is three inches behind the nose. The projectile requires 45.8 microseconds to reach the target nose and the dilatational wave, which travels at 7500 feet per second in the target, requires 33.3 microseconds to reach the grating at C. The high speed TRW camera which photographs the diffraction pattern has a maximum recording time of 250 microseconds. Therefore the total time duration between the point the projectile leaves the muzzle and the completion of the optical measurements is 328 microseconds with the result that the gas reaches the grating after the measurements are completed. In case the gas reaches the grating before the measurements are completed, which is possible if the material of the target specimen is changed or the location of the grating with respect to

the muzzle is altered, the gas does not hurt in any way as its pressure and temperature have dropped considerably by this time.

The primary and secondary deflectors are subjected to gas pressures of 17,300 psi and 1,280 psi respectively. These pressures give rise to high tensile and bending stresses. A rigorous stress analysis of the deflector has revealed that no part is stressed beyond the yield strength of the material.

3. Impact Chamber Extension

According to the original design, the muzzle end of the launch tube projected into the impact chamber and a muzzle seal flange was used to make the joint between the impact chamber and the launch tube vacuum tight. The overall dimensions of the target support and the gas deflector along the axis of the gun and the requirement that the projectile be allowed some distance of free flight before impact created the need to extend the length of the impact chamber. This was accomplished by designing an extension which houses the launch tube muzzle and part of the gas deflector as shown in Figure 6. The impact chamber extension, which replaced the muzzle seal flange, was designed to resist the longitudinal as well as hoop stresses due to internal gas pressure.

4. Breech Support

The difficulty in handling the breech and the high pressure section, which weigh 200 and 250 pounds respectively, while assembling the gun, was overcome by designing a sling type twin-belt roller support system shown in Figure 1. On account of its efficiency and versatility, this

support system, referred to as the breech support, replaced the one provided by the gun manufacturer since the latter provided only support capability at one location and could not be used for lifting and moving heavy loads such as the breech and the high pressure section. The breech support hangs from a trolley on an overhead track.

5. Projectile and Piston

Design of projectiles and sabots for light-gas guns is a field requiring a thorough understanding of all the parameters involved in each individual program under study. It is, however, recommended that projectiles of non-metallic materials such as Lexan, phenolic, plexiglas, polyethylene, etc. be used. Projectile materials such as steel can be used with an anticipation that the life of the launch tube will be reduced. If soft metals such as aluminum, copper, etc. are selected, care should be taken to maintain the projectile size sufficiently smaller than the launch tube bore to insure free passage and to prevent galling or seizing. The shape of the projectile again is related directly to the test program. The most common configurations in use are spheres or flat end barrel plugs. Figures 7(a), 7(b) and 7(c) show different projectile designs which have been used in the past with this two-stage light-gas gun. Presently the projectile shown in Figure 7(b) is being used with the 3/4 inch I.D. launch tube and the results are quite satisfactory.

A weighted high-density polyethylene piston has proven to be the most successful approach to date for the pump tube piston of the two-stage constant-base pressure light-gas gun. The piston is nominally 2 inches

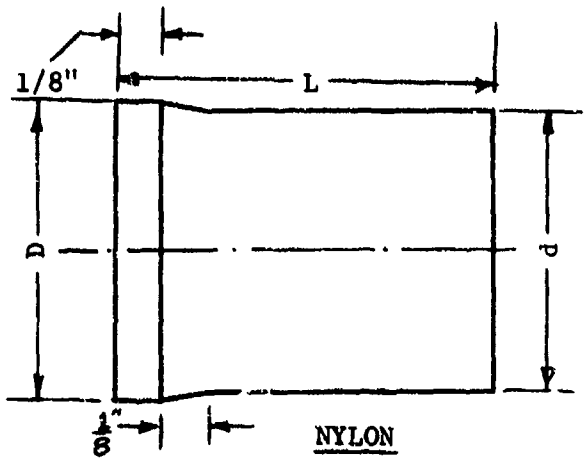

PHENOLIC	NYLON	LEXAN
L=1.057"+.000 -.003	L=1.192"+.002 -.000	L=1.150"+.002 -.000
D=3/4" +.001 -.001	D=3/4" +.000 -.001	D=3/4" +.000 -.002
d=3/4" +.000 -.001	d=3/4" +.000 -.002	d=3/4" +.000 -.004

Figure 7(a). Ten gram projectiles used with 3/4" launch tube

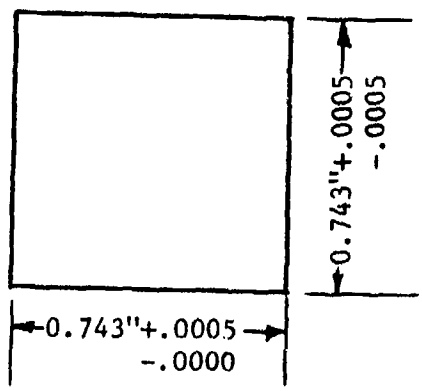

Figure 7(b). Five gram low density polyethylene projectile

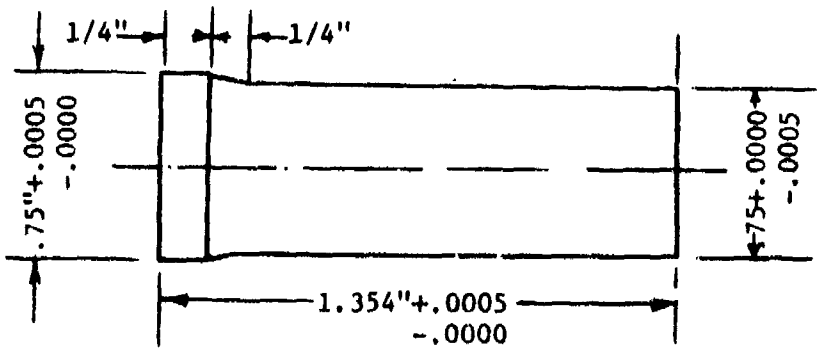

Figure 7(c). Five gram nylon projectile for 3/4" launch tube

in diameter. The weight is provided, if necessary, by boring out part of the polyethylene piston and replacing with the desired weight of lead and paraffin wax (paraffin heated and mixed with powered lead). It has been the practice in the past to mix lead and wax in the ratio of 1:1 by volume. Enough length of solid polyethylene piston must be left at the forward end in front of the lead and wax so that when the piston is extruded into the high pressure section only the solid polyethylene part is deformed while the lead and wax remain intact. This is necessary to avoid a serious cleaning problem should the lead and wax mixture burst out from the piston body and come in contact with the walls of high pressure section and pump tube. It is found from experience that pistons with about 2 1/2 inches of solid polyethylene in front of the lead and wax perform satisfactorily. After the lead and wax have hardened, a polyethylene cap is made as shown in Figure 8, a hole is drilled into the lead and wax, and the cap is inserted. The plug is designed with an outer diameter of such a tolerance as to fit very firmly in the pump tube. It usually requires striking the cap with a rubber mallet to insert the piston into the breech end of the pump tube. The tolerance on the diameter of the cap depends on the test program. Figure 8 shows the design of a piston and cap which have given successful velocity data. In cases where it is not necessary to use lead and wax to increase the weight of the piston (for lighter pistons), the design is simpler. The piston, in such cases, is cylindrical with collar of suitable tolerance. Figure 9 shows a high density polyethylene piston where the lead and wax mixture was not required. The figure also shows how the piston is deformed when stopped in the high pressure section.

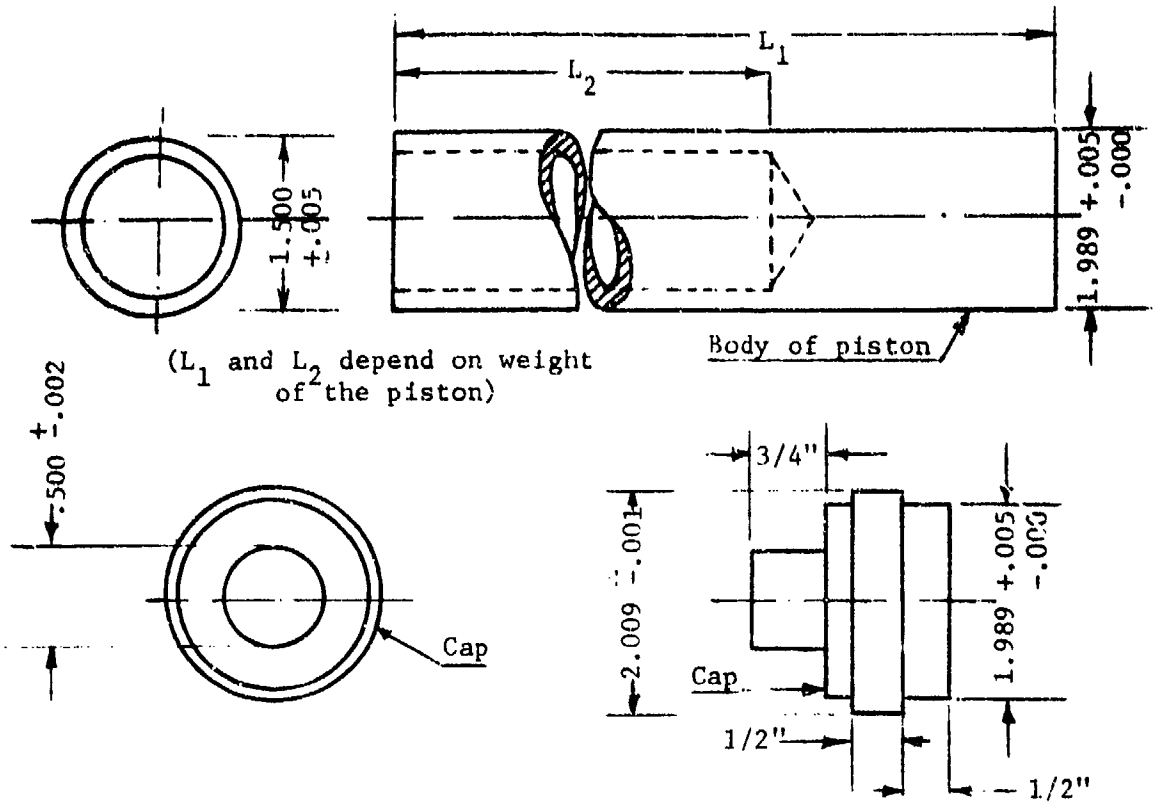

Figure 8. Piston and cap (half full size)

Figure 9. Piston and projectiles

Closer examination of the deformed piston shows that the front end of the piston was extruded into the launch tube and a part of the extruded end broke off and followed the projectile down the launch tube. Figure 9 also shows three 5 gram Lexan projectiles designed for the 3/4 inch diameter launch tube.

6. Impact Tube

The original impact tube consisted of a 3" O.D., 1/2 inch wall mechanical tubing as shown in Figure 6. The tube has a narrow slot serving as an optical window which provides access for incident laser beam to and diffraction phenomena from the diffraction grating on the target specimen. Tapped holes are provided at three stations on the impact tube for aligning the target.

After the target support, the gas deflector and impact chamber extension were installed, the gun was fired several times under fully instrumented conditions. It was observed that although the major portion of the propelling gas was kept away by the deflector from the impact site, the amount of gas flowing through the projectile passage of the gas deflector was sufficient to interfere with the optical measurements. This problem was solved by modifying the impact tube as shown in Figure 10.

The modified impact tube is basically similar to the original impact tube except that it has provision to attach two gas cups which narrow down the opening of the tube to 7/8 inch. A portion of the target is held in these cups with o-rings to seal the gaps between the target and the 7/8 inch diameter holes in the cups. The slant port in the primary gas cup is

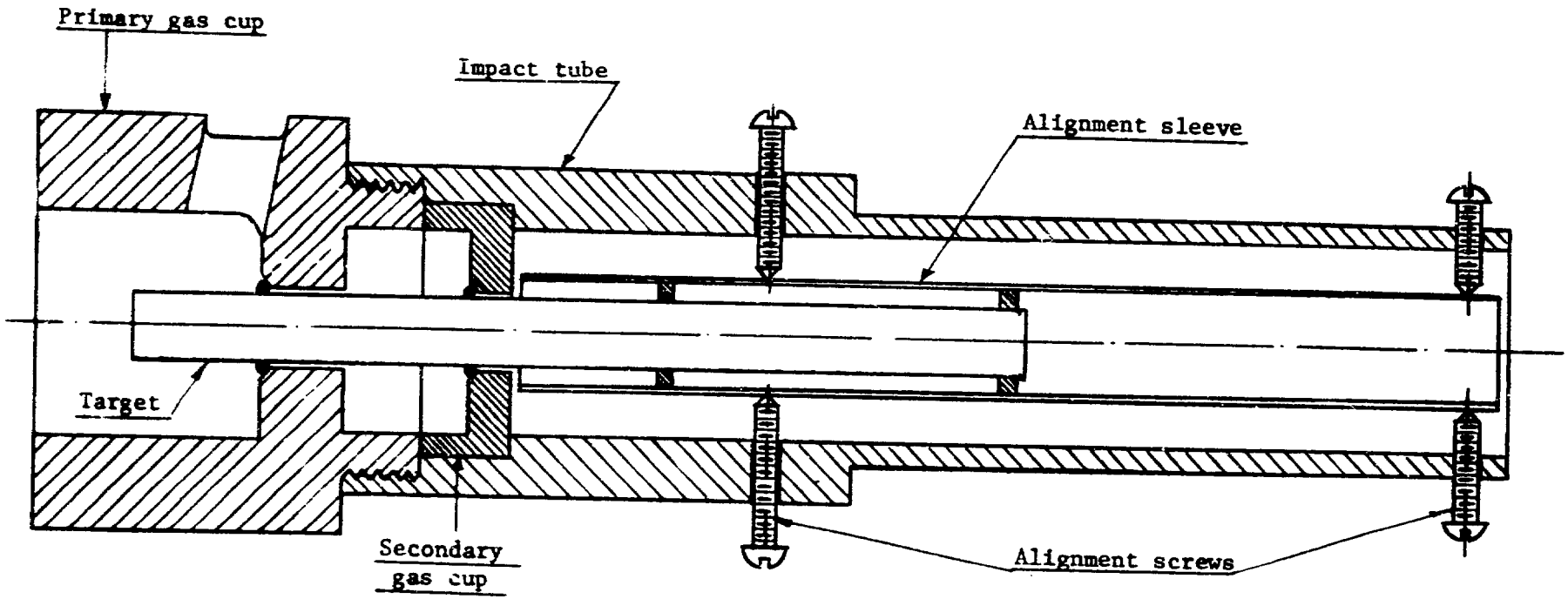

Figure 10. Modified impact tube

SCALE: Half full size

the passage for the gases. This impact tube, which is being used currently, has eliminated the entry of gas and debris into the vicinity of the grating during measurements.

IV. SELECTION OF POWDER CHARGE, GAS PRESSURE PISTON WEIGHT AND PROJECTILE WEIGHT

A detailed analysis of the interior ballistics of the constant-base-pressure two-stage light-gas gun is not within the scope of this report. Interested readers, however, are referred to the General Motors Corporation's technical report [8], wherein Hydrogen is used as the propellant gas. The procedure of calculating the weights of piston, projectile and powder charge and pressure of propellant gas, given in Appendix A [8], is also based on Hydrogen being the propellant.

One of the authors has used the same prediction in equation (8) to compute the variable parameters but replaced Hydrogen by Helium due to the fact that Helium is chemically inert and safer to use than Hydrogen. The computation results are tabulated in Appendix B, which shows tables that can be used to find the weights of the piston and powder charge and the Helium gas pressure for firing a projectile of known weight at a desired muzzle velocity. Table 1, Appendix B, indicates the gun parameters when the system uses the 3/4 inch inner diameter launch tube while Table 2, Appendix B, is for the 1/2 inch inner diameter launch tube.

V. SYSTEM OPERATION AND MAINTENANCE

Since the firing of the two-stage light-gas gun involves handling of explosives and since cleaning of the system after firing is a messy job, a considerable amount of time can be saved and probability of accidents occurring can be reduced if the operations are performed in a carefully preplanned and logical sequence. A detailed operation and maintenance procedure for the light-gas gun is described in the Operation and Maintenance Manual (11). Some of the details, of course, will not be pertinent for other installations. The following general procedure will apply to all the light-gas gun installations of this type.

1. Before assembling the light-gas gun system for firing, clean the pump tube, the launch tube, the breech and all the machined surfaces with clean rags with a small amount of acetone on them. Examine all the threads, clean them and apply Molykote if necessary. Apply a thin coating of vacuum grease on all the o-rings before installing them.

2. Determine the weight of the piston, the projectile, the helium gas pressure and weight of powder charge for the desired projectile velocity from the tables shown in Appendix B. Pack the gun powder (IRM-4064) in a thin paper bag and place it carefully in the breech such that only a single thickness of the paper is toward the firing mechanism.

3. With the use of vacuum pumps, create a vacuum of 30 in. of mercury in the pump tube, launch tube, impact chamber and catcher tank. Pump helium into the pump tube to the desired gage pressure.

4. Connect an air hose to the firing mechanism. The other end of

the hose is close to but not connected to a compressed air outlet which is located at a safe distance from the gun. Evacuate the firing area of all personnel and station one person at the compressed air outlet.

5. The last person to leave the firing area shall load a primed cartridge 30.06 filled with black powder in the firing chamber, remove the safety, leave the firing area and firing signal. On receiving the firing signal, the person at the compressed air outlet shall fire the gun by connecting the air hose to the compressed air outlet.

6. Remove the gaseous products of combustion from the pump tube and the catcher tank by connecting them to the exhaust system. Then carefully disassemble the system components for cleaning.

7. Drive the piston pieces out from the pump tube and the high pressure section and then clean the pump tube, the launch tube, the breech and the high pressure section with rags soaked with acetone. Hone the pump tube and the launch tube if necessary. Clean the firing mechanism and all parts of the breech.

8. If there is not a subsequent firing, apply rust preventative to all the surfaces which were cleaned with acetone. Inspect and clean all the threads and grooves and apply Molykote on the threads if necessary.

REFERENCES

1. Whitfield, J. K., Douglas, R. A. and Jeelani, S. "Powder Accelerator Systems for Axial Impact Studies." Office of Naval Research, Contract N00014-68-A-0187, TR 69-3, February 1969.

2. Jeelani, S., Whitfield, J. K. and Douglas, R. A. "Design and Performance of Powder Accelerator Systems for Impact Studies." Office of Naval Research, Contract N00014-68-A-0187, TR 71-2, May 1971.

3. Douglas, R. A., Bingham, W. L., Blake, H. W. and Liddell, W. L. "Experimental Methods for Diffraction Studies During Impact." Office of Naval Research, Contract N00014-68-A-0187, TR 69-1, February 1969.

4. Liddell, W. L., Steele, R. S., Bingham, W. L. and Douglas, R. A. "Experimentally-Determined Plastic Wave Velocities in Polycarbonate (Lexan)." Office of Naval Research, Contract N00014-68-A-0187, TR 70-10, December 1970.

5. Liddell, W. L., Steele, R. S., Bingham, W. L. and Douglas, R. A. "Experimentally-Determined Plastic Wave Velocities in Fully Annealed 1100F Aluminum." Office of Naval Research, Contract N00014-68-A-0187, TR 70-11, December 1970.

6. Liddell, W. L., Steele, R. S., Bingham, W. L. and Douglas, R. A. "Experimental Investigation of Large Amplitude Elastic Wave Propagation and the Elastic Plastic Transition in Polycarbonate (Lexan)." Office of Naval Research, Contract N00014-68-A-0187, TR 71-6, December 1971.

7. "NRL Progress Report No. PB181075 August 1962." U. S. Naval Research Laboratory, Washington, D.C.

8. "An Analysis of the Interior Ballistics of the Constant Base Pressure Gun." GM Defense Research Laboratories, Santa Barbara, California, TR 64-27, April 1964.

9. "Engineering Design Handbook, Gun Series, Muzzle Devices." Headquarters, U. S. Army Materiel Command AMCP Pamphlet 706-251, Chapter 3, May 1968.

10. Van, Wylen, "Thermodynamics" Art. 13.5.

11. Operation and Maintenance Manual for the Two-Stage Light-Gas Gun, North Carolina State University, Raleigh, N. C., August 1971.

APPENDIX A

Details of Two-Stage Light-Gas Gun Components

1. Breech

The breech mechanism consists of a 7" outer diameter, 3 1/2" inner diameter and 22 [illegible]" long steel cylindrical block, the ends of which are threaded internally to house the pump tube end, interbreech plug and breech adapter as shown in Figure 11. The breech is designed to take a maximum powder load of 850 grams. Spacers are provided to decrease the chamber volume when lower powder loads are used. A spacer selection table is given at the end of this appendix. The interbreech plug, (Figure 11), holds the shear disc in position. The breech adapter, which closes the open end of the breech, has external threads at the inner end on which the spacer is mounted and has internal threads at the outer end in which the firing mechanism is screwed. The breech block, the interbreech plug and the breech adapter are made from 4340 steel and heat treated to give hardness between Rockwell 36C and 38C and minimum yield of 125,000 pounds per square inch.

2. Pump Tube

The pump tube of the two-stage light-gas gun is a 20 feet long smooth bore barrel of 4140 steel heat treated to obtain minimum yield strength of 90,000 pounds per square inch. The barrel, which has an outer diameter of 4 inch and inner diameter of 2 inch, has 4"-4UNC threads on 5 inch length from both ends. The left end goes into the breech while the right end is connected to one of the holding flanges as shown in Figure 12. Two needle

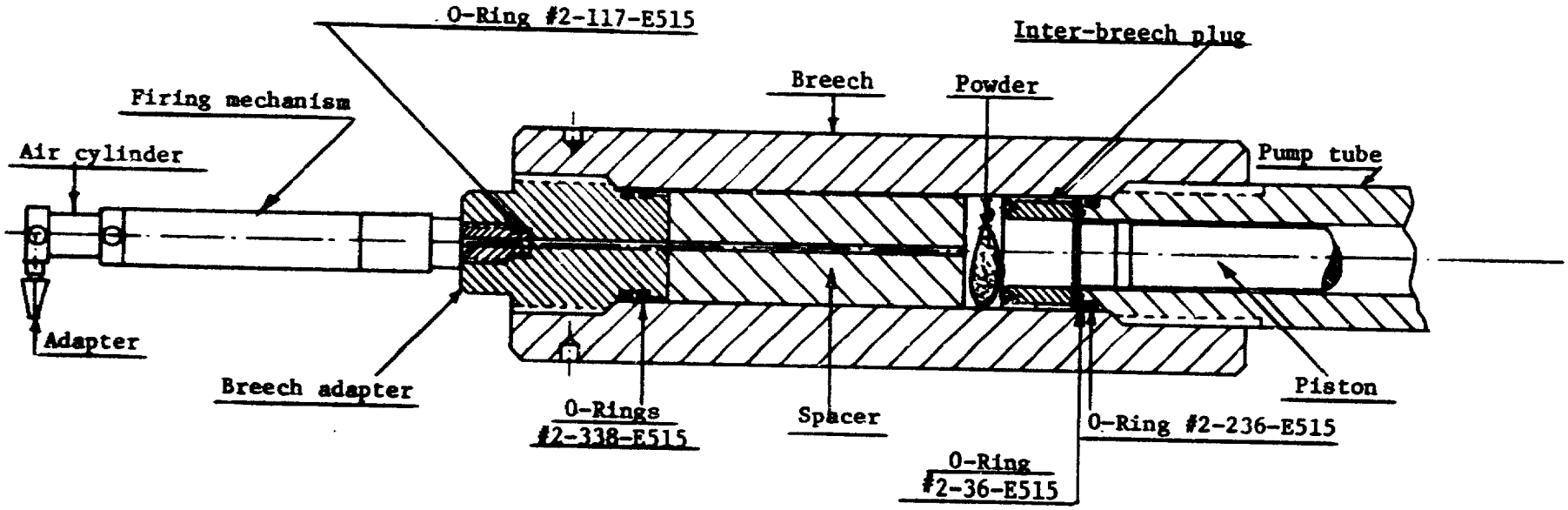

Figure 11. Assembly of pump tube, breech and firing mechanism

SCALE: 1/5th full size

valves, which are called gage valve and air/gas valve, for convenience, are mounted on the pump tube. The gage valve is used to mount the pressure/vacuum gage and evacuate the tube of the powder gases after firing while the air/gas valve is used to pull vacuum and admit helium into the pump tube.

3. High Pressure Section

Two high pressure sections, one to be used with 3/4 inch I.D. launch tube and the other with 1/2 inch I.D. launch tube, were received. The high pressure section is an 8 inch outer diameter, 19 inch long 4340 steel block heat treated to give Rockwell hardness between C38 and C42. It has a 6 inch long, 2 inch I.D. straight bore which tapers down to 3/4" or 1/2" over 10 inch length, after which it is straight, Figure 12. The straight 2 inch diameter bore guides the piston into the tapered bore where the piston is plastically deformed. The ends of the pump and launch tube fit in the ends of the high pressure section as shown in Figure 12. The high pressure section is held in position by pulling the holding flanges toward each other by tightening the holding bolts with an impact wrench.

4. Launch Tubes

The launch tubes are 10 feet long, 3 inch outer diameter smooth bore barrels of 1/2" and 3/4" inner diameters. The high pressure section ends of the launch tubes have 3"-12UNC threads on which the holding flange is mounted. The barrels were made out of 4340 steel and heat treated to

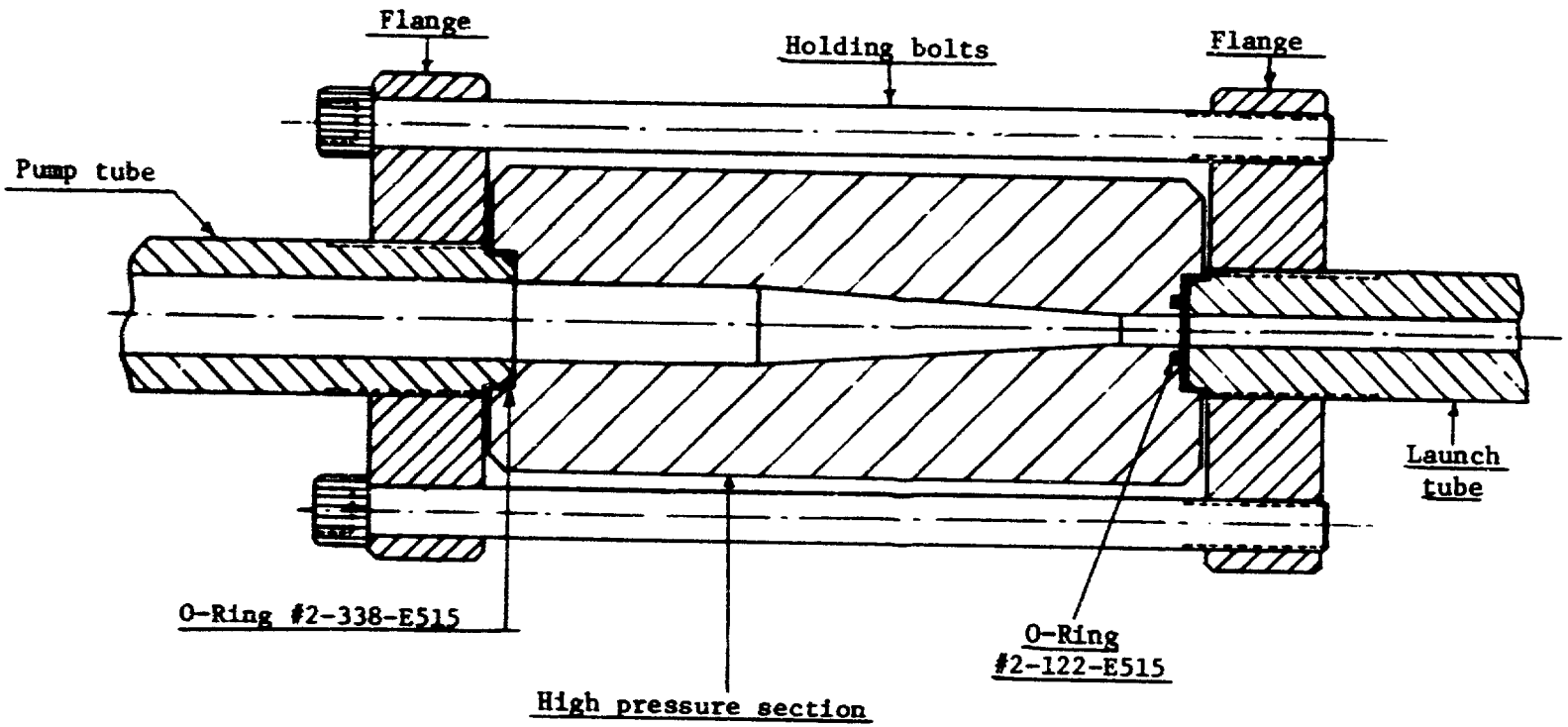

Figure 12. Assembly of pump tube, high pressure section and launch tube

SCALE: 1/5th full size

Rockwell hardness of C38 to C42. Modification to the muzzle ends is shown in Section III.

5. Impact Chamber & Catcher Tank

The impact chamber is a large cylindrical chamber of 36 inch inner diameter and 22 1/4 inch length, supported by two vertical plates as shown in Figure 4. The muzzle end of the launch tube enters the impact chamber through a 5 inch diameter central hole in the back plate. A muzzle seal flange was provided to seal the joint between the launch tube and the impact chamber back plate. Optical windows are provided as shown in Figure 4 to be used for optical measurements and similar purposes.

The catcher tank is 3 feet in inner diameter and 8 feet long vacuum tight tank mounted on swivel casters as shown in Figures 1 and 4. The interior of the tank contains a 600 pound steel energy absorbing block supported by trolleys. The block, which is meant to stop the debris after impact, can roll forward and backward on the horizontal track on which the trolleys are mounted. The catcher and impact chamber are clamped together by the adjustable clamps provided on the latter. An o-ring between them ensures a vacuum tight joint.

Spacer Selection Table

640 - 850 gm. of powder	no spacer
440 - 640 gm. of powder	small spacer (3" long)
240 - 440 gm. of powder	medium spacer (6" long)
0 - 240 gm. of powder	large spacer (9" long)

APPENDIX B

Powder Weight, Helium Gas Pressure and Piston Weight for Projectiles of Known Weight and Predicted Muzzle Velocities.

TABLE I. Two stage light-gas gun with 3/4" I.D. launch tube.

Projectile Wt. (GMS.)	Projectile Velocity (ft/sec)	Helium Pressure (PSIG)	Piston Wt. (LB)	Powder Wt. (GMS)
5.000	8000.00	14.4148	0.70105	23.6689
5.000	9000.00	17.6013	0.74655	31.8510
5.000	10000.00	21.0930	0.79284	41.8858
5.000	11000.00	25.0000	0.84800	55.0000
5.000	12000.00	28.7000	0.90000	57.0000
5.000	13000.00	33.5908	0.93645	86.2944
5.000	14000.00	38.5124	0.98585	107.1633
5.000	15000.00	43.8612	1.03596	131.8551
5.000	16000.00	49.6723	1.08675	160.9441
5.000	17000.00	55.9852	1.13818	195.0857
5.000	18000.00	62.8432	1.19020	235.0260
5.000	19000.00	70.2950	1.24277	281.6159
5.000	20000.00	78.3942	1.29582	335.8255
6.000	8000.00	17.2978	0.84127	28.4027
6.000	9000.00	21.1216	0.89586	38.2212
6.000	10000.00	25.3116	0.95141	50.2630
6.000	11000.00	29.6000	1.01000	65.2000
6.000	12000.00	34.8000	1.07000	84.0000
6.000	13000.00	40.3090	1.12375	103.5532
6.000	14000.00	46.2149	1.18302	128.5960
6.000	15000.00	52.6334	1.24315	158.2261
6.000	16000.00	59.6068	1.30410	193.1330
6.000	17000.00	67.1822	1.36582	234.1028

Table I, continued.

Projectile Wt. (GMS.)	Projectile Velocity (ft/sec)	Helium Pressure (PSIG)	Piston Wt. (LB)	Powder Wt. (GMS)
6.000	18000.00	75.4119	1.42825	282.0311
6.000	19000.00	84.3540	1.49132	337.9390
6.000	20000.00	94.0730	1.55499	402.9905
7.000	8000.00	20.1808	0.98148	33.1365
7.000	9000.00	24.6419	1.04518	44.5914
7.000	10000.00	29.5302	1.10998	58.6402
7.000	11000.00	34.5000	1.18000	77.5000
7.000	12000.00	40.0000	1.25000	96.5000
7.000	13000.00	47.0272	1.31104	120.8121
7.000	14000.00	53.9174	1.38019	150.0287
7.000	15000.00	61.4057	1.45035	184.5971
7.000	16000.00	69.5413	1.52145	225.3218
7.000	17000.00	78.3793	1.59346	273.1199
7.000	18000.00	87.9806	1.66629	329.0364
7.000	19000.00	98.4130	1.73988	394.2623
7.000	20000.00	109.7519	1.81415	470.1557
8.000	8000.00	23.0638	1.12169	37.8703
8.000	9000.00	28.1622	1.19449	50.9617
8.000	10000.00	33.7488	1.26855	67.0174
8.000	11000.00	39.0000	1.35000	90.0000
8.000	12000.00	46.0000	1.43000	112.5000
8.000	13000.00	53.7453	1.49833	138.0710

Table I, continued.

Projectile Wt. (GMS.)	Projectile Velocity (ft/sec)	Helium Pressure (PSIG)	Piston Wt. (LB)	Powder Wt. (GMS)
8.000	14000.00	61.6198	1.57736	171.4614
8.000	15000.00	70.1779	1.65754	210.9682
8.000	16000.00	79.4758	1.73881	257.5107
8.000	17000.00	89.5763	1.82109	312.1371
8.000	18000.00	100.5492	1.90433	376.0416
8.000	19000.00	112.4720	1.98843	450.5855
8.000	20000.00	125.4307	2.07332	537.3208
9.000	8000.00	25.9467	1.26190	42.6041
9.000	9000.00	31.6824	1.34380	57.3319
9.000	10000.00	37.9674	1.42712	75.3945
9.000	11000.00	44.5000	1.52500	100.0000
9.000	12000.00	52.0000	1.62000	127.5000
9.000	13000.00	60.4635	1.68562	155.3299
9.000	14000.00	69.3223	1.77453	192.8941
9.000	15000.00	78.9502	1.86473	237.3392
9.000	16000.00	89.4102	1.95616	289.6995
9.000	17000.00	100.7733	2.04873	351.1542
9.000	18000.00	113.1178	2.14237	423.0465
9.000	19000.00	126.5310	2.23699	506.9085
9.000	20000.00	141.1095	2.33248	604.4858
10.000	8000.00	28.8297	1.40211	47.3379
10.000	9000.00	35.2027	1.49311	63.7021

Table I, continued.

Projectile Wt. (GMS.)	Projectile Velocity (ft/sec)	Helium Pressure (PSIG)	Piston Wt. (LB)	Powder Wt. (GMS)
10.000	10000.00	42.1860	1.58569	83.7717
10.000	11000.00	50.0000	1.70000	110.0000
10.000	12000.00	58.000	1.90000	140.0000
10.000	13000.00	67.1817	1.87291	172.5888
10.000	14000.00	77.0248	1.97170	214.3267
10.000	15000.00	87.7225	2.07192	263.7103
10.000	16000.00	99.3447	2.17351	321.8883
10.000	17000.00	111.9704	2.27637	390.1714
10.000	18000.00	125.6865	2.38041	470.0520
10.000	19000.00	140.5900	2.48554	563.2319
10.000	20000.00	156.7884	2.59165	671.6510

TABLE 2. Two stage light-gas gun with 1/2" I.D. launch tube.

Projectile Wt. (GMS.)	Projectile Velocity (ft/sec)	Helium Pressure (PSIG)	Piston Wt. (LB)	Powder Wt. (GMS)
5.000	8000.00	9.2109	3.12688	21.2237
5.000	9000.00	11.2105	3.29730	28.0504
5.000	10000.00	13.3752	3.46989	36.2194
5.000	11000.00	15.7084	3.64474	45.8983
5.000	12000.00	18.2153	3.82191	57.2733
5.000	13000.00	20.9026	4.00144	70.5509
5.000	14000.00	23.7781	4.18332	85.9602
5.000	15000.00	26.8509	4.36755	103.7550
5.000	16000.00	30.1314	4.55411	124.2160
5.000	17000.00	33.6312	4.74293	147.6541
5.000	18000.00	37.3627	4.93397	174.4127
5.000	19000.00	41.3400	5.12716	204.8718
5.000	20000.00	45.5781	5.32242	239.4513
6.000	8000.00	11.0530	3.75226	25.4684
6.000	9000.00	13.4526	3.95676	33.6605
6.000	10000.00	16.0502	4.16387	43.4633
6.000	11000.00	18.8501	4.37368	55.0780
6.000	12000.00	21.8584	4.58629	68.7279
6.000	13000.00	25.0831	4.80172	84.6610
6.000	14000.00	28.5337	5.01999	103.1522
6.000	15000.00	32.2211	5.24107	124.5060
6.000	16000.00	36.1577	5.46494	149.0593

Table 2, continued.

Projectile Wt. (GMS.)	Projectile Velocity (ft/sec)	Helium Pressure (PSIG)	Piston Wt. (LB)	Powder Wt. (GMS)
6.000	17000.00	40.3574	5.69152	177.1849
6.000	18000.00	44.8352	5.92077	209.2952
6.000	19000.00	49.6079	6.15260	245.8461
6.000	20000.00	54.6937	6.38690	287.3416
7.000	8000.00	12.8952	4.37764	29.7131
7.000	9000.00	15.6947	4.61622	39.2705
7.000	10000.00	18.7253	4.85784	50.7072
7.000	11000.00	21.9918	5.10263	64.2577
7.000	12000.00	25.5015	5.35067	80.1826
7.000	13000.00	29.2636	5.60201	98.7712
7.000	14000.00	33.2893	5.85665	120.3443
7.000	15000.00	37.5913	6.11458	145.2570
7.000	16000.00	42.1840	6.37575	173.9025
7.000	17000.00	47.0836	6.64011	206.7158
7.000	18000.00	52.3078	6.90757	244.1778
7.000	19000.00	57.8760	7.17803	286.8206
7.000	20000.00	63.8093	7.45139	335.2319
8.000	8000.00	14.7374	5.00301	33.9579
8.000	9000.00	17.9368	5.27569	44.8806
8.000	10000.00	21.4003	5.55183	57.9511
8.000	11000.00	25.1335	5.83158	73.4373
8.000	12000.00	29.1446	6.11505	91.6372

Table 2, continued.

Projectile Wt. (GNS.)	Projectile Velocity (ft/sec)	Helium Pressure (PSIG)	Piston Wt. (LB)	Powder Wt. (GNS)
8.000	13000.00	33.4442	6.40230	112.8814
8.000	14000.00	38.0449	6.69332	137.5363
8.000	15000.00	42.9615	6.98009	166.0080
8.000	16000.00	48.2103	7.28658	198.7457
8.000	17000.00	53.8099	7.58870	236.2466
8.000	18000.00	59.7803	7.89436	279.0604
8.000	19000.00	66.1439	8.20346	327.7948
8.000	20000.00	72.9250	8.51587	383.1221
9.000	8000.00	16.5796	5.62839	38.2026
9.000	9000.00	20.1789	5.93515	50.4907
9.000	10000.00	24.0753	6.24580	65.1950
9.000	11000.00	28.2752	6.56053	82.6170
9.000	12000.00	32.7877	6.87944	103.0919
9.000	13000.00	37.6247	7.20259	126.9915
9.000	14000.00	42.8006	7.52998	154.7284
9.000	15000.00	48.3317	7.86160	186.7590
9.000	16000.00	54.2366	8.19740	223.5689
9.000	17000.00	60.5361	8.53729	265.7774
9.000	18000.00	67.2529	8.88116	313.9429
9.000	19000.00	74.4119	9.22890	368.7691
9.000	20000.00	82.0406	9.58036	431.0123
10.000	8000.00	18.4218	6.25377	42.4474

Table 2, continued.

Projectile Wt. (GMS.)	Projectile Velocity (ft/sec)	Helium Pressure (PSIG)	Piston Wt. (LB)	Powder Wt. (GMS)
10.000	9000.00	22.4210	6.59461	56.1008
10.000	10000.00	26.7504	6.93978	72.4389
10.000	11000.00	31.4169	7.28948	91.7967
10.000	12000.00	36.4307	7.64382	114.5466
10.000	13000.00	41.8052	8.00288	141.1018
10.000	14000.00	47.5562	8.36665	171.9205
10.000	15000.00	53.7019	8.73511	207.5101
10.000	16000.00	60.2629	9.10823	248.4321
10.000	17000.00	67.2624	9.48587	295.3083
10.000	18000.00	74.7254	9.86795	348.8255
10.000	19000.00	82.6800	10.25433	409.7437
10.000	20000.00	91.1562	10.64484	478.9026